TOOL impex
CZECH REPUBLIC s.r.o.

TABLE OF CONTENTS

Advanced Drilling Portable Machines ---------- 1

Advanced Drilling Cutting Tools ---------- 25

Hand Drilling Tools ---------- 31

Microstop Cages for Hand Drilling Tools ---------- 49

Hand Drilling Cutting Tools ---------- 73

Riveting Equipment ---------- 99

Assembly Tools ---------- 123

Apex Fastening Tools ---------- 147

Index ---------- 156

The Aerospace Industry requires strength under pressure and durability at high speeds. Therefore, you need to use strong, powerful tools that are up to the challenge.

Apex Power Tools, part of the Apex Tool Group, represents one of the most diverse families of products in the manufacturing industry, comprising global brands such as Cleco, Dotco, Recoules Quackenbush, and Apex.

Our products serve Aerospace, from fastening and material removal tools to sophisticated drilling equipment, our products are used in quality- and safety-critical applications around the world.

AEROSTRUCTURES

Tail
Wing
Fuselage
Wing Box
Wing Skin & Repair
Wing Skin & Stringer Nose
Leading Edge & Trailing Edge

FINAL ASSEMBLY

Cockpit
Wing Box
Fuselage Join
Fuselage Interior
Wing to Body Join
Pylon / Engine Mount

Advanced Drilling Portable Equipment
Advanced Drilling Cutting Tools
Microstop Cages for Hand Drilling Tools
Hand Drilling Cutting Tools
Riveting Equipment
Assembly Tools
Apex Fastening Tools

MAINTENANCE REPAIR & OVERHAUL

Wing Repair
Engine Repair
Interior Repair
Fuselage Repair

FLYAWAY HARDWARE

Cabins
Landing Gear
Seat Assembly
Wheel Assembly

Microstop Cages for Hand Drilling Tools
Hand Drilling Cutting Tools
Assembly Tools
Apex Fastening Tools

Recoules Quackenbush®
Precision Drilling-Every Time

Positive Feed - Automatic | A2 Series ---------- 2

Positive Feed - Automatic | A1 Series ---------- 4

Positive Feed - Automatic | 20932, 20942, 20952, 20962 Series ---------- 6

Positive Feed - Automatic | 230 Series ---------- 8

Positive Feed - Manual | 158Q, 15Q Series ---------- 10

Positive Feed - Manual | Mini C-Clamp ---------- 12

Hydraulic Air Feed Drills - Pistol | 21500, CD Series ---------- 14

Hydraulic Air Feed Drills - Angle | PA, PB Series ---------- 15

Hydraulic Air Feed Drills - Peck Feed | HT3, HT4 Series ---------- 16

Hydraulic Air Feed Drills - Self-Colleting | 136, 120, 180 Series ---------- 17

Hydraulic Air Feed Drills - Nut Plate | 10QNPD Series ---------- 18

Floor Pump Lubricators ---------- 19

Accu-Lube | Micro-Lubrication ---------- 20

Accu-Lube | Lubricants ---------- 21

Positive Feed Drilling Options | MITIS™ Chip Fragmentation ---------- 22

Positive Feed Drilling Options ---------- 23

Hydraulic Controlled Air Feed Options ---------- 24

Recoules Quackenbush®
Precision Drilling-Every Time

DESCRIPTION

- Drill and 100% countersink with chip fragmentation using proven Mitis™ technology.
- Nominal capacity 1/2 in / 12.7 mm in aluminum and CFRP, 3/8 in / 10 mm in titanium.
- Easy-change access to change both feed and MITIS™ in less than 15 minutes.
- External shear pin for gear head protection and easy change.
- Tested and proven on thousands of drilled holes.
- Grease ports, self-contained bearings, and captive O-rings reduce service costs.
- Up to 500 hours / 100000 cycle PM interval.
- Configurable error-proofing with electronic counter for cutter change and service interval.
- Available in both turbine and vane-governed power unit options to minimize speed drop.
- Many customizable options, see page 23.

MODEL	MOTOR CONFIGURATION	STROKE	RATED SPEED -0 / +10%	FEEDS		ACCESSORIES	STD CUTTER / SPINDLE ATTACHMENT
				IPR	mm / TR		
A24V	Right Angle Vane Motor	Per Application	220, 275, 325, 350, 400, 430, 500, 550, 600, 650, 700, 800, 1000, 1150, 1500, 1700, 2300, 2600, 2900, 3300, 3700, 3900, 4200, 4500, 5200	0.001 0.002 0.003 0.004 0.006 0.007 0.008 0.010	0.03 0.05 0.08 0.10 0.15 0.18 0.20 0.25	See Options	1/4 in - 28F 5/16 in - 24F 3/8 in - 24F 7/16 in - 20F 9/16 in - 18F
A24T	Right Angle Turbine		450, 550, 650, 700, 850, 1000, 1200, 1800, 2700, 3400, 4000, 4400, 5400				
A26V	In Line Vane Motor		220, 275, 325, 350, 400, 430, 500, 550, 600, 650, 700, 800, 1000, 1150, 1500, 1700, 2300, 2600, 2900, 3300, 3700, 3900, 4200, 4500, 5200				
A26T	In Line - Turbine		450, 550, 650, 700, 850, 1000, 1200, 1800, 2700, 3400, 4000, 4400, 5400				

Recoules Quackenbush®
Precision Drilling-Every Time

TYPE	SPEED		A	B	W_1	W_2	H_1	H_2	L_1	L_2
Right Angle	2300-5400	mm	16	22.6	45	58	85	70	326	NA
	250-5400		16	22.6	45	58	85	70	339	NA
	2300-5400	in	0.63	0.89	1.77	2.28	3.35	2.76	12.83	NA
	250-5400		0.63	0.89	1.77	2.28	3.35	2.76	13.35	NA
Inline	2300-5400	mm	16	22.6	45	58	85	70	302	110
	250-5400		16	22.6	45	58	85	70	315	110
	2300-5400	in	0.63	0.89	1.77	2.28	3.35	2.76	11.89	4.33
	250-5400		0.63	0.89	1.77	2.28	3.35	2.76	12.40	4.33

A2 Series Inline - Turbine Motor Shown

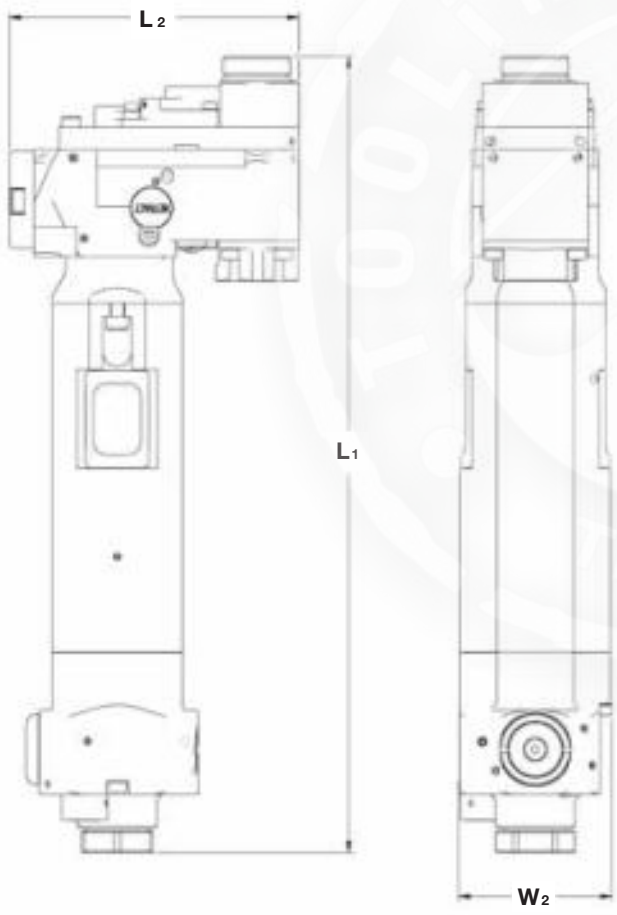

A2 Series Right Angle - Turbine Motor Shown

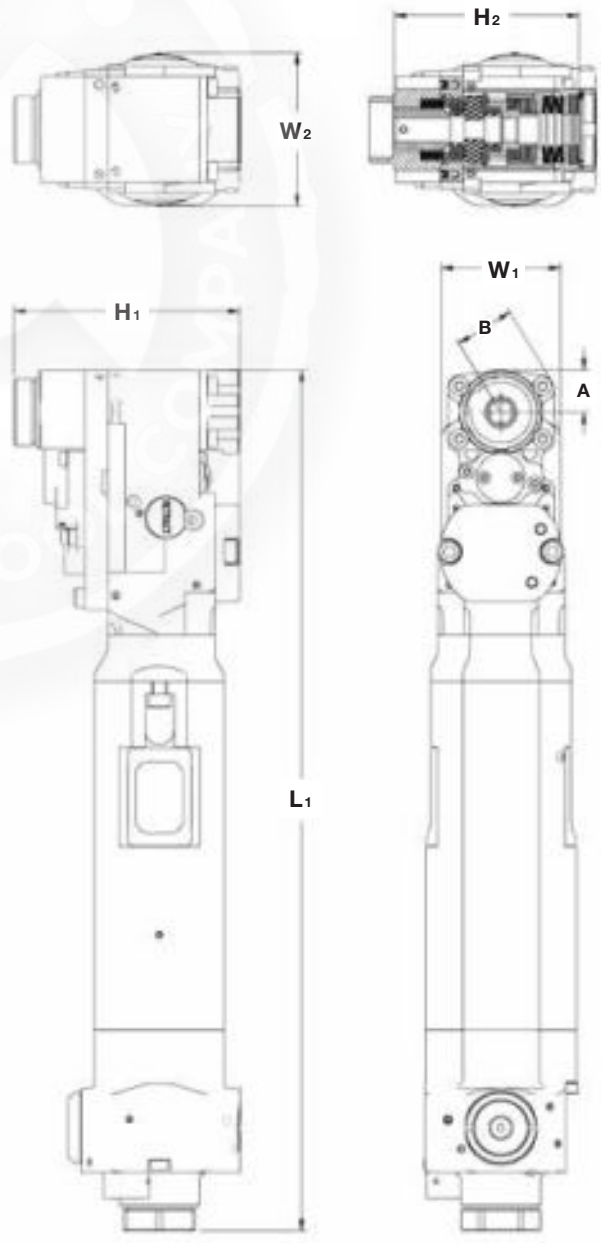

TECHNICAL DATA

Base Weight: 5 lbs / 2.3 kg
Noise Level: <=85 dBA
Air Inlet Pressure: 90 psi / 6.3 bar
Countersink Accuracy: ± 0.001 in / ± 0.02 mm
Power: Turbine - 2.2 hp / 1.6 kW, Vane - 1.4 hp / 1 kW
Thrust: 400 lbs / 1800 N

Recoules Quackenbush®
Precision Drilling-Every Time

DESCRIPTION

- Drill and 100% countersink with chip fragmentation using proven Mitis™ technology.
- Nominal capacity 1 in / 25.4 mm in aluminum and CFRP, 5/8 in / 16 mm in titanium.
- Configurable error-proofing with electronic counter for cutter change and service interval.
- Up to 500 hours /100000 cycle PM interval.
- Easy-change access to change both feed and MITIS™ in less than 15 minutes.
- Turbine 2.4 hp / 1.8 kW, Vane 1.7 hp / 1.3 kW.
- Integrated MITIS™ available for optimum chip evacuation/reduced clean-up time.
- External shear pin for gear head protection and easy change.
- Many customizable options, see page 23.

MODEL	MOTOR CONFIGURATION	PER APPLICATION	RATED SPEED -0 / +10%	FEEDS		ACCESSORIES	STD CUTTER / SPINDLE ATTACHMENT
				IPR	MM/TR		
A14V	Right Angle Vane Motor	40 60 80 100 120 140	250, 320, 350, 410, 460, 510, 600, 670, 760, 850, 1100, 950, 1450, 1700, 1900, 2100, 2500, 2800, 3100	0.001 0.002 0.003 0.004 0.006 0.007 0.008	0.025 0.05 0.08 0.10 0.15 0.18 0.20	See Options	1/4 in - 28F 5/16 in - 24F 3/8 in - 24F 7/16 in - 20F 9/16 in - 18F
A14T	Right Angle Turbine		400, 600, 750, 950, 1700, 2500, 3200				
A16V	In Line Vane Motor		250, 320, 350, 410, 460, 510, 600, 670, 760, 850, 950, 1450, 1700, 1900, 2100, 2500, 2800, 3100				
A16T	In Line - Turbine		400, 600, 750, 950, 1700, 2500, 3200				

Recoules Quackenbush®
Precision Drilling-Every Time

TYPE		SPEED		R_1	R_2	W_1	W_2	H_1	H_2	L_1	L_2
Vane	Right Angle	1500 - 4100	mm	10	20	55	67	97	81	360	NA
		250 - 1100		10	20	55	67	97	81	392	NA
		1500 - 4100	in	0.39	0.79	2.17	2.64	3.82	3.19	14.17	NA
		250 - 1100		0.39	0.79	2.17	2.64	3.82	3.19	15.43	NA
	Inline	1500 - 4100	mm	10	20	55	67	97	81	320	137
		250 - 1100		10	20	55	67	97	81	352	137
		1500 - 4100	in	0.39	0.79	2.17	2.64	3.82	3.19	12.60	5.39
		250 - 1100		0.39	0.79	2.17	2.64	3.82	3.19	13.86	5.39
Turbine	Right Angle	1500 - 4100	mm	10	20	55	67	97	81	362	NA
		250 - 1100		10	20	55	67	97	81	394	NA
		1500 - 4100	in	0.39	0.79	2.17	2.64	3.82	3.19	14.25	NA
		250 - 1100		0.39	0.79	2.17	2.64	3.82	3.19	15.51	NA
	Inline	1500 - 4100	mm	10	20	55	67	97	81	322	137
		250 - 1100		10	20	55	67	97	81	354	137
		1500 - 4100	in	0.39	0.79	2.17	2.64	3.82	3.19	12.68	5.39
		250 - 1100		0.39	0.79	2.17	2.64	3.82	3.19	13.94	5.39

A1 Series Inline - Turbine Motor Shown

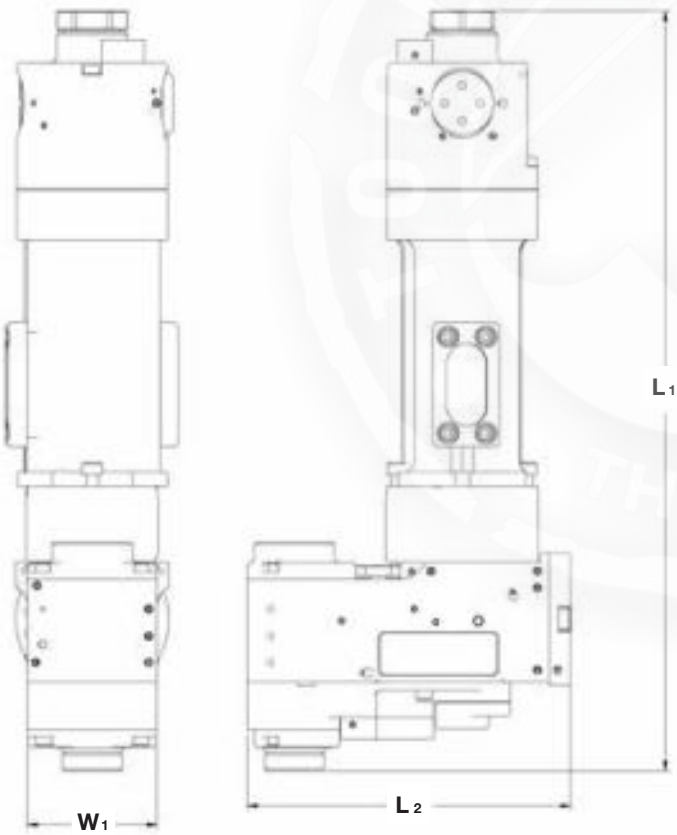

A1 Series Right Angle - Vane Motor Shown

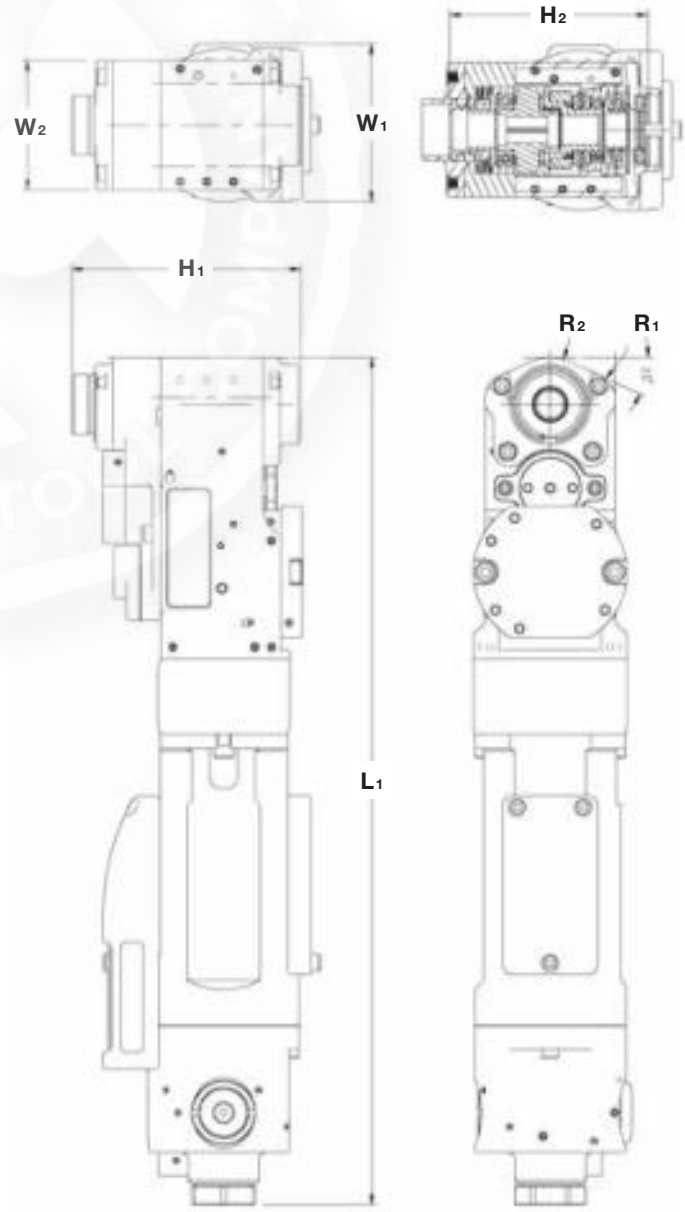

TECHNICAL DATA

Base Weight: 7 lbs / 3.2 kg
Noise Level: <=85 dBA
Air Inlet Pressure: 90 psi / 6.3 bar
Countersink Accuracy: ± 0.001 in / ± 0.02 mm
Power: Turbine - 2.4 hp / 1.8 kW, Vane - 1.7 hp / 1.3 kW
Thrust: 500 lbs / 2200 N

Recoules Quackenbush®
Precision Drilling-Every Time

DESCRIPTION

- Nominal capacity 1/2 in /12.7 mm in aluminum and CFRP, 3/8 in / 10 mm in titanium.
- 20942 and 20962 able to drill and 100% countersink with chip fragmentation using proven MITIS™ technology.
- 20932 and 20952 are drill/ream only with no countersink capability.
- Many customizable options, see page 23.

MODEL	MOTOR CONFIGURATION	STROKE	SPEEDS	FEED RATE	SPINDLE ATTACHMENT	ACCESSORIES
20932/932QR - Standard	Right Angle	Per Application	400, 750, 1100, 1400, 1700, 2700, 4500	0.0005, 0.001, 0.002, 0.003, 0.004 ipr	1/4 in - 28. 5/16 in - 24, 3/8 in - 24, 9/16 in - 18, 200DA Collet, *Specials on Request*	See Options
20942/942QR - Standard	Right Angle	Per Application	401, 750, 1100, 1400, 1700, 2700, 4500	0.0005, 0.001, 0.002, 0.003, 0.004, ipr	1/4 in - 28, 5/16 in - 24, 3/8 in - 24, 9/16 in - 18, 200DA Collet, *Specials on Request*	See Options
20952/952QB - Standard	Inline	Per Application	402, 750, 1100, 1400, 1700, 2700, 4500	0.0005, 0.001, 0.002, 0.003, 0.004 ipr	1/4 in - 28, 5/16 in - 24, 3/8 in - 24, 9/16 in - 18, 200DA Collet, *Specials on Request*	See Options
20962/962QB - Standard	Inline	Per Application	403, 750, 1100, 1400, 1700, 2700, 4500	0.0005, 0.001, 0.002, 0.003, 0.004 ipr	1/4 in - 28, 5/16 in - 24, 3/8 in - 24, 9/16 in - 18, 200DA Collet, *Specials on Request*	See Options
20932/932QR - Boosted	Right Angle	Per Application	450, 800, 1300, 1600, 2000, 3200	0.0005, 0.001, 0.002, 0.003, 0.004 ipr	1/4 in - 28, 5/16 in - 24, 3/8 in - 24, 9/16 in - 18, 200DA Collet, *Specials on Request*	See Options
20942/942QR - Boosted	Right Angle	Per Application	451, 800, 1300, 1600, 2000, 3200	0.0005, 0.001, 0.002, 0.003, 0.004 ipr	1/4 in - 28, 5/16 in - 24, 3/8 in - 24, 9/16 in - 18, 200DA Collet, *Specials on Request*	See Options
20952/952QB - Boosted	Inline	Per Application	452, 800, 1300, 1600, 2000, 3200	0.0005, 0.001, 0.002, 0.003, 0.004 ipr	1/4 in - 28, 5/16 in - 24. 3/8 in - 24, 9/16 in - 18, 200DA Collet, *Specials on Request*	See Options
20962/962QB - Boosted	Inline	Per Application	453, 800, 1300, 1600, 2000, 3200	0.0005, 0.001, 0.002, 0.003, 0.004 ipr	1/4 in - 28, 5/16 in - 24, 3/8 in - 24, 9/16 in - 18, 200DA Collet, *Specials on Request*	See Options

Recoules Quackenbush®
Precision Drilling-Every Time

20942

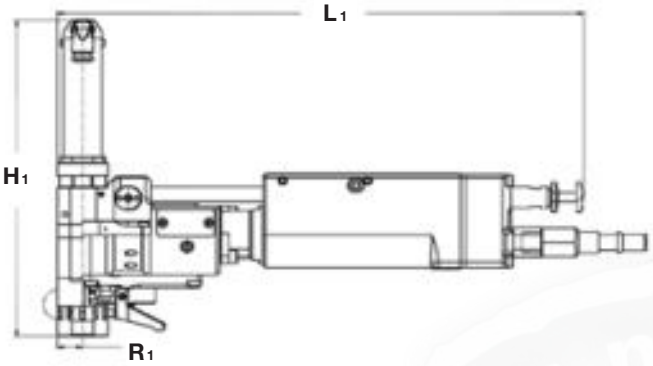

20962

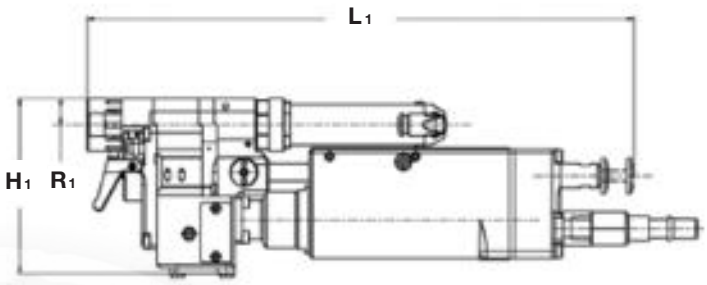

20932

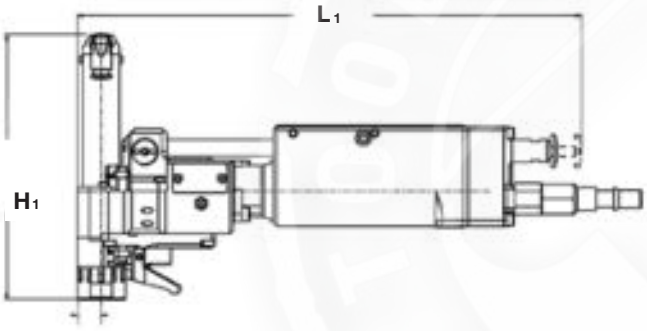

R1

20952

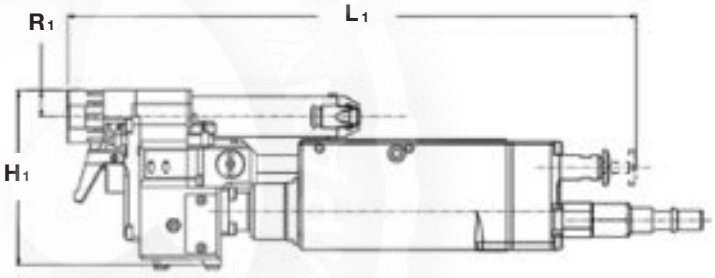

TYPE	SPEED	UNITS	L1	H1	R1
20932 - Standard 20942 - Standard	1700 - 4500	mm	313	Varies by Stroke	15
		in	12.4		0.6
	1400	mm	329		15
		in	13		0.6
	400 - 110	mm	345		15
		in	13.6		0.6
20952 - Standard 20962 - Standard	1700 - 4500	mm	321	99.5	15
		in	12.7	3.92	0.6
	1400	mm	337	99.5	15
		in	13.3	3.92	0.6
	400 - 110	mm	354	99.5	15
		in	14	3.92	0.6
20932 - Boosted 20942 - Boosted	2000 - 3250	mm	338	Varies by Stroke	15
		in	13.4		0.6
	1600	mm	354		15
		in	14		0.6
	450 - 1300	mm	370		15
		in	14.6		0.6
20952 - Boosted 20962 - Boosted	2000 - 3250	mm	346	99.5	15
		in	13.7	3.92	0.6
	1600	mm	362	99.5	15
		in	14.3	3.92	0.6
	450 - 1300	mm	379	99.5	15
		in	15	3.92	0.6

TECHNICAL DATA

Power: 1.0 hp / 0.75 kW, Boosted - 1.3 hp / 1.0 kW
Motor power: Standard
Base Weight: 4.6 lbs / 2.1 kg
Noise level: <=85 dBA
Air Inlet pressure: 90 Psi / 6.3 bar
Countersink precision: ± 0.001 in - 20942 & 20962 only
Thrust: 360 lbs / 1600 N

Recoules Quackenbush®
Precision Drilling-Every Time

DESCRIPTION

- Fully automatic drill cycle start, feed, retract, stop.
- Wide range of fixturing options and accessories.
- Use spindles of varying lengths to provide range of stroke* required for the application.
- Spindle can be manually retracted at any point during the cycle.
- Many customizable options, see page 23.

MODEL	MOTOR CONFIGURATION	SPEEDS	FEED RATE	SPINDLE ATTACHMENT	STROKE	ACCESSORIES
230QB	Inline	75, 97, 120, 150, 188, 240, 307, 310, 390, 480, 585, 680, 825, 960, 1155, 1500	0.0005, 0.001, 0.002, 0.003, 0.0045, 0.006, 0.008, 0.012 ipr	1/4 in - 28, 5/16 in - 24, 3/8 in - 24, 9/16 in - 18, 200DA Collet, *Specials on Request*	Per Application	See Options
230QR-GD Gun Drill	Right Angle	1500 1850 2100	0.0005, 0.001 ipr	1/4 in - 28, 5/16 in - 24, 3/8 in - 24, 9/16 in - 18, 200DA Collet, *Specials on Request*	Per Application	See Options
230QR	Right Angle	50, 65, 80, 100, 125, 160, 205, 260, 320, 390, 440, 550, 640, 770, 1000	0.0005, 0.001, 0.002, 0.003, 0.0045, 0.006, 0.008, 0.012 ipr	1/4 in - 28, 5/16 in - 24, 3/8 in - 24, 9/16 in - 18, 200DA Collet, *Specials on Request*	Per Application	See Options
230QRV Variable Speed	Right Angle	50 -125 100 - 250 210 - 520 420 - 1000	0.0005, 0.001, 0.002, 0.003, 0.0045, 0.006, 0.008, 0.012 ipr	1/4 in - 28, 5/16 in - 24, 3/8 in - 24, 9/16 in - 18, 200DA Collet, *Specials on Request*	Per Application	See Options
230QBV Variable Speed	Inline	75 - 187 150 - 375 330 - 780 600 - 1500	0.0005, 0.001, 0.002, 0.003, 0.0045, 0.006, 0.008, 0.012 ipr	1/4 in - 28, 5/16 in - 24, 3/8 in - 24, 9/16 in - 18, 200DA Collet, Specials on Request	Per Application	See Options

Recoules Quackenbush®
Precision Drilling-Every Time

Right Angle

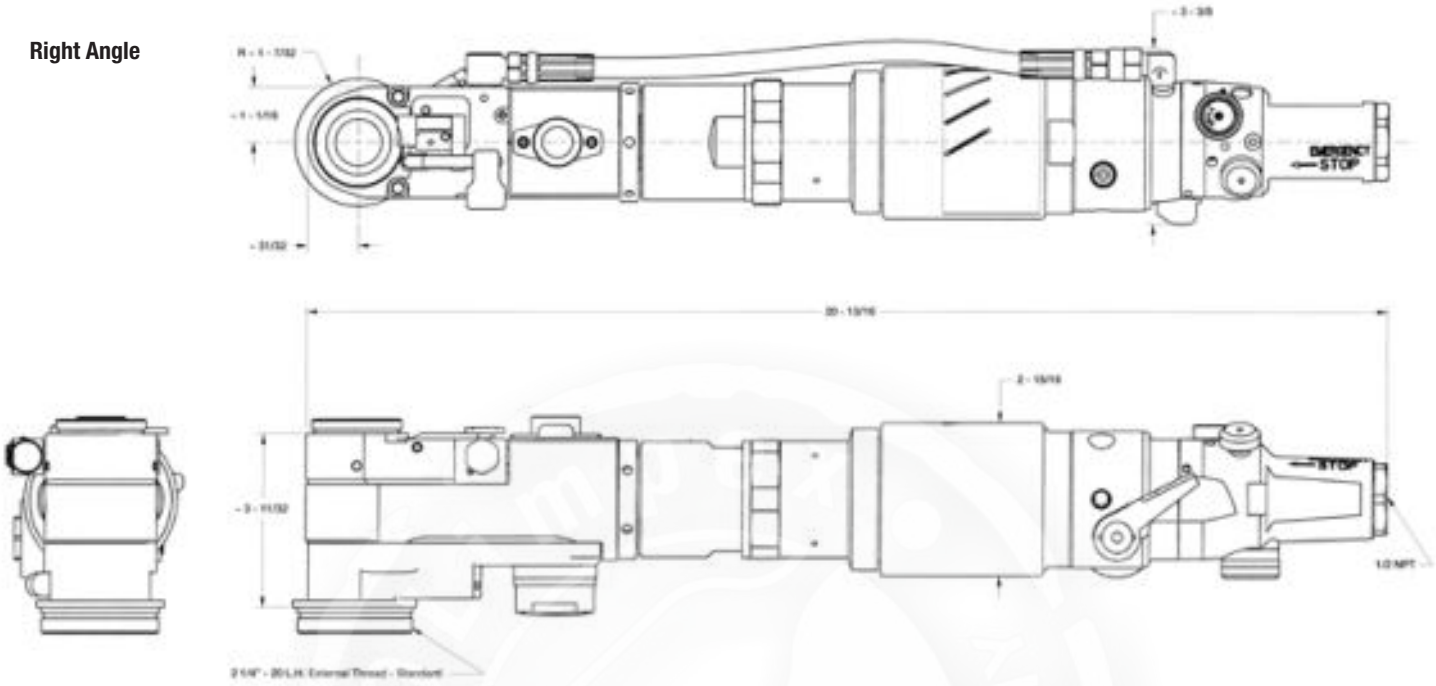

Inline

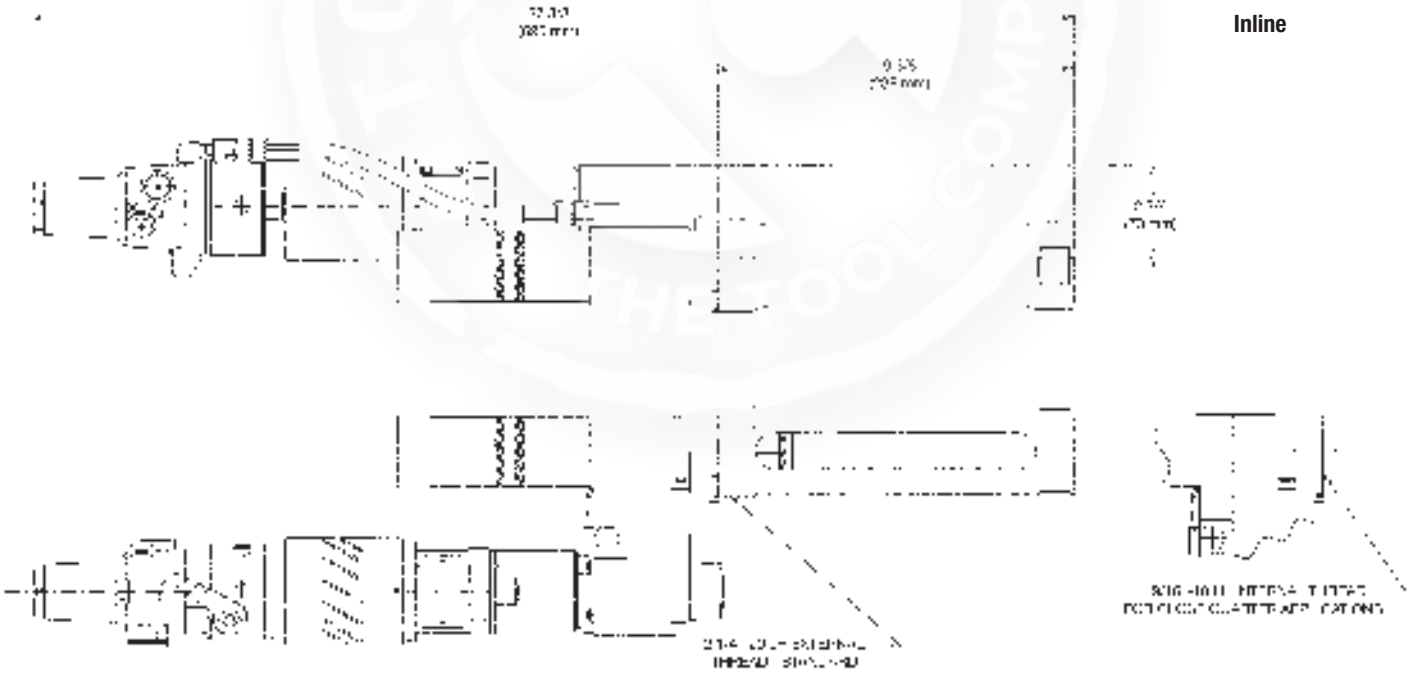

TECHNICAL DATA

Motor power: Standard
Base Weight: 15.8 - 17 lbs / 7.1 - 7.7 kg
Noise: <=80 dBA
Nominal Power: 2.1 hp
Recommended Hose Size: 1/2 in / 12 mm
Air Consumption: 69
Thrust: 1800 lbs

Recoules Quackenbush®
Precision Drilling-Every Time

DESCRIPTION

- Nominal capacity: 158Q - 1 in / 25 mm in aluminum and CFRP, 5/8 in / 16 mm in titanium.
  15QR - 5/8 in / 16 mm in aluminum and CFRP, 1/2 in / 12.7 mm in titanium.
- Separate manual control for air motor and feed - less affect from air supply variation.
- Feed is engaged by pressing down on feed engagement lever/button.
- Automatic retract stop with protective rolling impulse clutch prevents jamming of spindle at end of retract.
- Air motor is manually started at beginning and shut off at completion of drill cycle.
- Use spindles of varying lengths to provide range of stroke* required for the application.
- 15QRHD new heavy duty gives greater hole capacity/durability (up to 5/8 in - titanium) in a compact size.
- 15QRHD Externally replaceable shear pin provides gear protection if chips pack or cutter binds.
- Many customizable options, see page 23.

MODEL	MOTOR CONFIGURATION	SPEEDS	FEED RATE	SPINDLE ATTACHMENT	STROKE	ACCESSORIES
158QR	Right Angle	47, 56, 70, 94, 110, 120,140, 185, 194, 230, 288, 380, 388, 460, 485, 570, 760, 950	0.0005, 0.001, 0.002, 0.0035, 0.0055, 0.0075 ipr	1/4 in - 28, 5/16 in - 24, 3/8 in - 24, 9/16 in - 18, 200DA Collet, *Specials on Request*	Per Application	See Options
158QRV - Variable Speed	Right Angle	47-120, 92-230, 194-485, 380-950	0.0005, 0.001, 0.002, 0.0035, 0.0055, 0.0075 ipr	1/4 in - 28, 5/16 in - 24, 3/8 in - 24, 9/16 in - 18, 200DA Collet, *Specials on Request*	Per Application	See Options
158-15QRHDV - Variable Speed	Right Angle	70 - 150, 140 - 290, 250 - 600, 490 - 1200, 2000 - 3000	0.0005, 0.001, 0.002, 0.003, 0.006 ipr	1/4 in - 28, 5/16 in - 24, 3/8 in - 24, 9/16 in - 18, 200DA Collet, *Specials on Request*	Per Application	See Options
158-15QRHD	Right Angle	110, 140, 230,290, 490, 600,1000, 1200,2000, 3000	0.0005, 0.001, 0.002, 0.003, 0.006 ipr	1/4 in - 28, 5/16 in - 24, 3/8 in - 24, 9/16 in - 18, 200DA Collet, *Specials on Request*	Per Application	See Options
15QRHD	Right Angle	165, 265, 335, 465, 660, 1000, 1650	0.0005, 0.001, 0.002, 0.003, 0.006 ipr	1/4 in - 28, 5/16 in - 24, 3/8 in - 24, 9/16 in - 18, 200DA Collet, *Specials on Request*	Per Application	See Options

Recoules Quackenbush
Precision Drilling-Every Time

158QR(V)

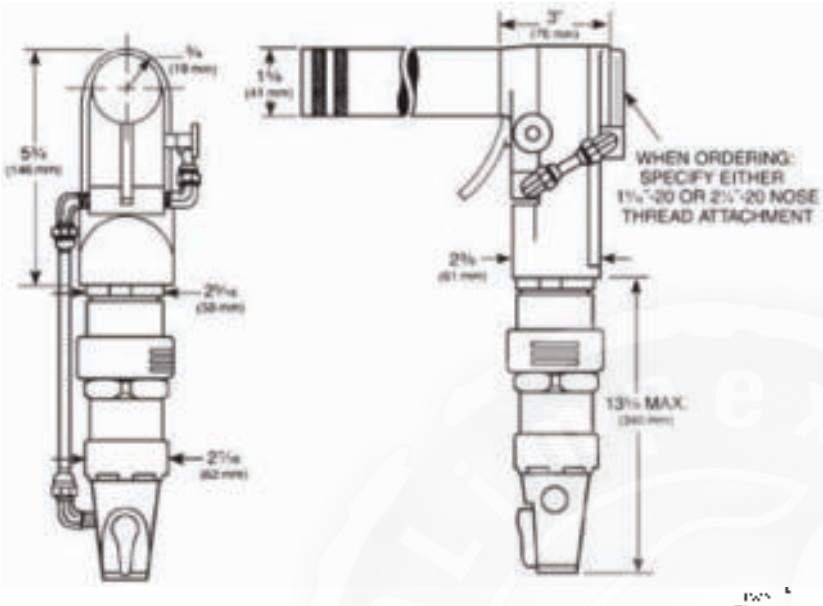

158-15QR-(V)HD

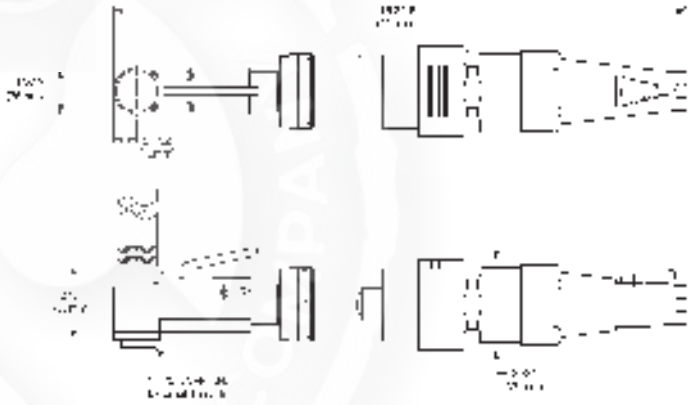

15QRHD

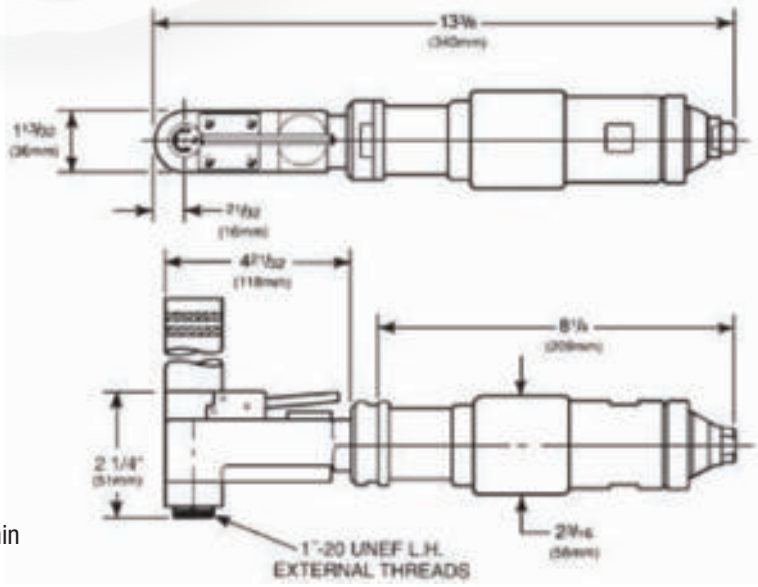

TECHNICAL DATA

Motor power: 15 - 1 hp / 0.75 kW, 158 - 1.6 hp / 1.2 kW
Base Weight: 15 - 5 lbs / 2.3 kg, 158 - 9.8 lbs / 4.5 kg
Noise: <=80 dBA
Air Inlet Pressure: 90 psi / 6.3 bar
Recommended Hose Size: 1/2 in / 12 mm
Air Consumption: 15 - 42 cfm / 1190 l/min, 158 - 63 cfm / 1780 l/min
Thrust: 158Q Series - 1000 lbs, 158 & 15QR Series - 500 lbs

Recoules Quackenbush®
Precision Drilling-Every Time

DESCRIPTION

- Simple and easy to fixture and operate -fixturing can be eliminated.
- Extremely compact for difficult access applications such as ribs and spars.
- Expandable cover for safety.
- Modular design.
- Precision bushing to maintain normality and guide the cutter.
- Safety interlock to maintain clamp while running.
- Many customizable options, see page 23.

MODEL	SPEED RPM	FEED in / rev (ipr)	FEED mm /rev	SPINDLE ATTACHMENT OPTIONS	STROKE in / mm	NOMINAL POWER hp / kW	FIXTURING OPTIONS	ACCESSORIES
20802-MCC	380 560 950 1500 1800 2200 3800 6100	0.001 0.003 0.004	0.028 0.07 0.10	1/4 in - 28 5/16 in - 24 M4 M6 Specials on Request	Std 1 / 25.4 Other strokes on Request	0.9 / 0.70	Locate on Prehole in Component: Pilot on Cutter. Locating Pin on Clamp Locate on Outside Diameter of Bushing	M Mitis™ Chip Fragmentation. Vacuum. Onboard Lubricator. Floor Pump Lubricator. Electronic Cycle Counter - (Service. Maintenance and Cutter Life). Cutters
158-15QRHD-MCC	110 230 490 600 1200 2000 3000	0.0005 0.001 0.002 0.003 0.006	0.013 0.025 0.051 0.076 0.152	1/4 in - 28 5/16 in - 24 3/8 in - 24 9/16 in - 18 200DA Collet Specials on Request		1.6 / 1.2		Vacuum. Onboard Lubricator. Floor Pump Lubricator. Electronic Cycle Counter - (Service. Maintenance and Cutter Life). Cutters
158-15QRVHD-MCC	140 - 290 490 - 1200 2000 - 3000							

Recoules Quackenbush®
Precision Drilling-Every Time

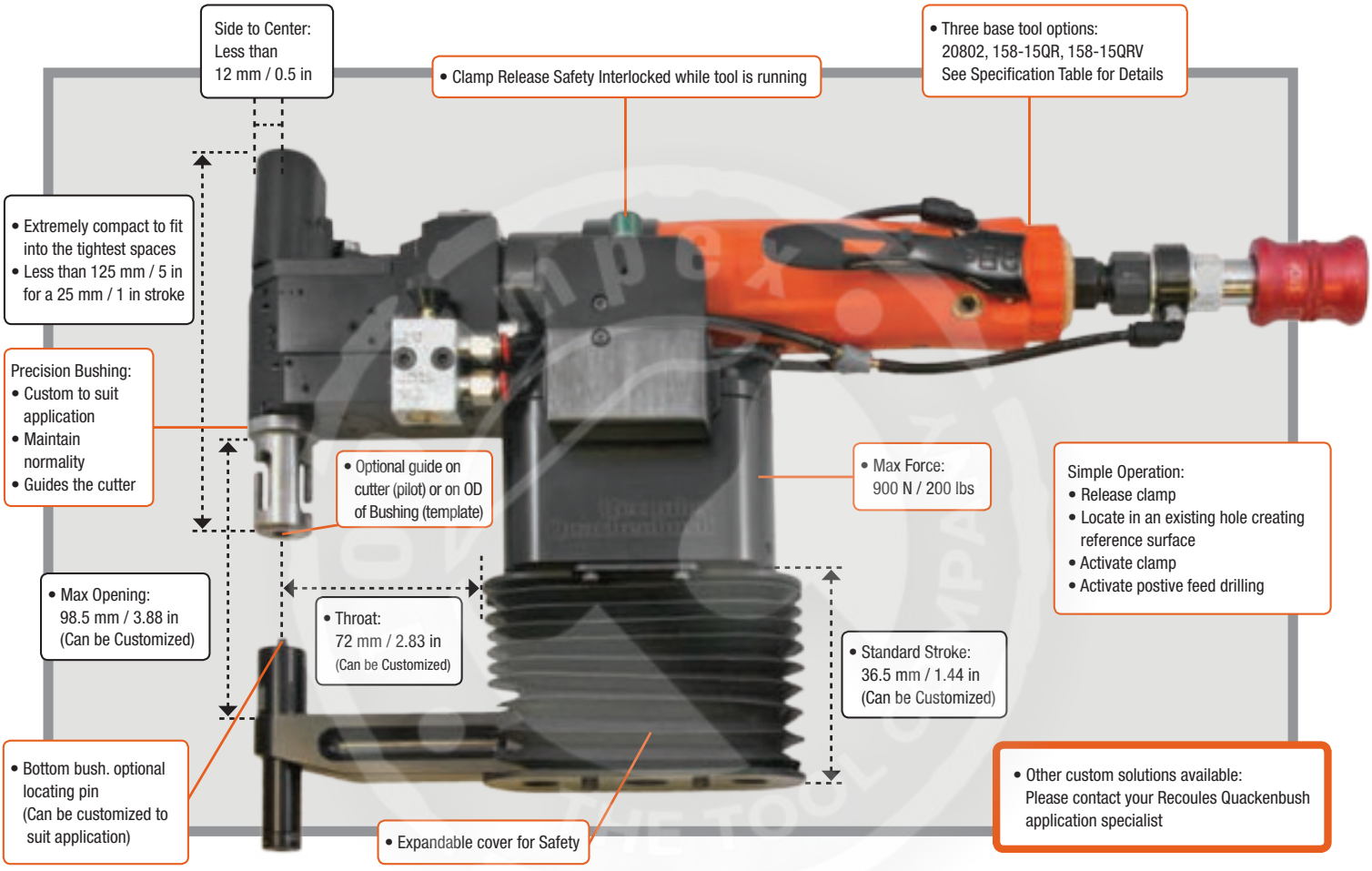

TECHNICAL DATA

Motor power: 158 - 1.6 hp / 1.2 kW, 20802 - 0.9 hp / 0.7 kW
Base Weight: 158 - 4 kg / 8.8 lbs, 20802 - 3 kg / 6.6 lbs
Noise: <=80 dBA
Air Inlet Pressure: 90 psi / 6.3 bar
Recommended Hose Size: 1/2 in / 12 mm
Air Consumption: 158 - 63 scfm / 1780 l/min, 20802 - 36 scfm / 1000 l/min

Recoules Quackenbush®
Precision Drilling-Every Time

DESCRIPTION

- Compact portable air-feed drill with hydraulic feed control.
- Reduced operator effort for drilling / countersinking.
- Lightweight and comfortable grip.
- Range of speeds, stroke, and power.
- Range of location / fixture options.
- Vacuum option to reduce clean up.
- Many customizable options, see page 24.

MODEL	SPEEDS	STROKE in / mm	ACCESSORIES
21500 21502 120QP	15000	1 / 25	See Options
CD14	500, 800, 1300, 1900, 3200, 5200, 6200, 20000	1 / 25	See Options
CD1V	Variable, 150-550, 400-1200, 700-2400	1 / 25	See Options
CD15	1000, 1700, 4500, 18000	1 / 25	See Options
CD25	1000, 1700, 4500, 18000	2 / 51	See Options
CD2V	Variable, 150-550, 400-1200, 700-2400	2 / 51	See Options
CD24	500, 800, 1300, 1900, 3200, 5200, 6200, 20000	2 / 51	See Options

TECHNICAL DATA

Motor Power: CD-V & CD-4 - 0.9 hp / 0.67 kW, CD-5 - 1.3 hp / 1.0 kW, 21500 - 1.2 hp / 0.95 kW
Base Weight: 40 lbs / 1.8 kg
Thrust: CD1 - 90 lbs / 400 N, CD2 - 120 lbs / 535 N, 21500 - 55 lbs / 245 N
Noise Level: <=85 dBA
Countersink Accuracy: ± .002 in / ±.05 mm
Air Consumption: CD-V - 32 scfm / 900 l/min, CD-4 - 30 scfm / 850 l/min, CD-5 - 46 scfm / 1300 l/min, 21500 - 30 scfm / 850 l/min
Recommended Hose Size: 1/2 in / 12 mm

Recoules Quackenbush®
Precision Drilling-Every Time

DESCRIPTION

- PA for Drilling small holes in aluminum, PB for larger holes in aluminum, titanium, and steel.
- Compact air feed with hydraulic feed control.
- Access very confined spaces.
- Modular design.
- Variety of angle head, speeds, and yoke sizes.
- Thrust actuated by button / toggle or combine with drill lever (tape lock only).
- Drill point lubricator can improve hole quality and extend cutter life.
- Many customizable options, see page 24.

MODEL	NOMINAL POWER hp / kW	MOTOR CONFIGURATION	SPEEDS	SPINDLE ATTACHMENT	STROKE in / mm	THRUST lbs / N	RECOMMENDED HOSE SIZE ID	AIR CONSUMPTION SCFM / l/min
PAX-5XX	0.9 / 0.67	PA2 - Squeeze Yoke PA3 - Push Away PA5 - Taper lok	300, 500, 750, 1000, 1300, 2100, 3500, 4500	1/4 in - 28 Heavy Duty Angle Head. 5/16 in - 24 Heavy Duty Angle Head 3/8 in - 24 Heavy Duty Angle Head	1.25 / 31.8	120 / 540	1/2 in / 12 mm	32 / 900
PAX-6XX	0.9 / 0.67	PA2 - Squeeze Yoke PA3 - Push Away PA5 - Taper lok	450, 750, 1100, 1400, 1850, 3000, 5000, 6000	1/4 in - 28 MiniAngle Head 5/16 in - 24 Mini Angle Head	1.25 / 31.8	120 / 540	1/2 in / 12 mm	32 / 900
PAX-8XX	0.9 / 0.67	PA2 - Squeeze Yoke PA3 - Push Away PA5 - Taper lok	300, 500, 750, 1000, 1300, 2100, 3500, 4550	300DA Collet Spindle	1.25 / 31.8	120 / 540	1/2 in / 12 mm	32 / 900
PBX-5XX	0.9 / 0.67	PA2 - Squeeze Yoke PA3 - Push Away PA5 - Taper lok	300, 500, 750, 1000, 1300, 2100, 3500, 4500	1/4 in - 28 Heavy Duty Angle Head. 5/16 in - 24 Heavy Duty Angle Head 3/8 in - 24 Heavy Duty Angle Head	1.25 / 31.8	160 / 710	1/2 in / 12 mm	32 / 900
PBX-6XX	0.9 / 0.67	PA2 - Squeeze Yoke PA3 - Push Away PA5 - Taper lok	450, 750, 1100, 1400, 1850, 3000, 5000, 6000	1/4 in - 28 MiniAngle Head 5/16 in - 24 Mini Angle Head	1.25 / 31.8	160 / 710	1/2 in / 12 mm	32 / 900
PBX-8XX	0.9 / 0.67	PA2 - Squeeze Yoke PA3 - Push Away PA5 - Taper lok	300, 500, 750, 1000, 1300, 2100, 3500, 4550	300DA Collet Spindle	1.25 / 31.8	160 / 710	1/2 in / 12 mm	32 / 900

Recoules Quackenbush®
Precision Drilling-Every Time

DESCRIPTION

- Can eliminate reaming operations, Drills materials dry while maintaining acceptable hole quality and long cutter life.
- Peck feed drills drill a short distance, then retract from the hole to clear the chips and dissipate heat.
- Adjustable, controlled feed rate, adjustable peck rate, depth control, and rapid advance.
- HT3 Series Capacity: Aluminum – 1.25 in / 32 mm, Titanium – 1 in / 25 mm, Steel – 1 in / 25 mm.
- HT3 Series Push button peck disable for non-peck advance at any time during the drilling cycle.
- HT4 Series Capacity: Aluminum – 0.5 in / 13 mm, Titanium – 0.375 in / 10 mm, Steel – 0.375 in / 10 mm.
- One button start, fully automatic cycle.
- Reduces cost per hole.
- Equal drill time.
- Many customizable options, see page 24.

HT3

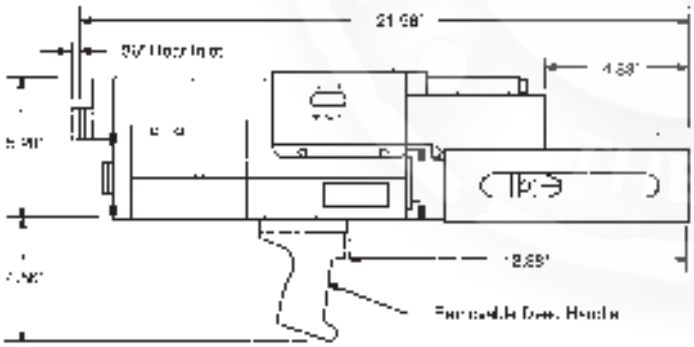

HT4

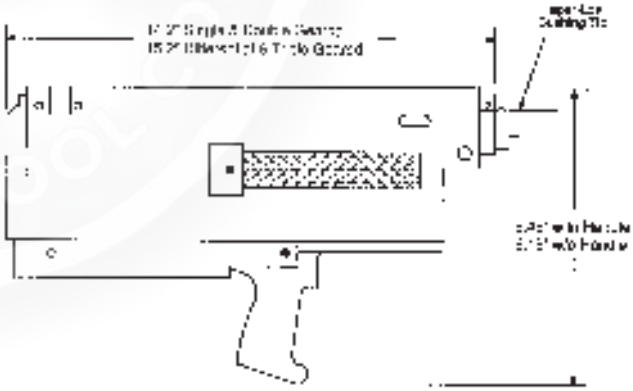

MODEL	NOMINAL POWER hp / kW	MOTOR CONFIGURATION	SPEEDS	STROKE in / mm	THRUST lbs / N	FIXTURING OPTIONS	RECOMMENDED HOSE SIZE ID in / mm
HT3	1.1 / 0.8	Pistol Grip	3000, 2400, 2100, 1600, 650, 475, 300, 150, 80	3 / 76.2	630 / 2800	Nose Concentric Collet	1/2 / 12
HT4	0.75 / 0.6	Pistol Grip	22000, 11000, 5700, 2900, 1500, 780, 500, 270, 150	4 / 102	500 / 2225	21k series 22k series 23k series 24k series Concentric Collet	3/8 / 10

Recoules Quackenbush®
Precision Drilling-Every Time

DESCRIPTION

- Range of Self-Colleting air fed tools with hydraulic feed control for hole making operations.
- Variety of spindle speeds and terminations to satisfy a wide range of applications.
- Micro Depth Adjustment - countersink depths within ± 0.001 in.
- 136TF Hole Spacing Range: 0.5 in / 12.5 mm to 2.75 in / 70 mm.
- 120TF Hole Spacing Range: 1.00 in to 3.50 in.
- Many customizable options, see page 24.

MODEL	NOMINAL POWER hp / kW	MOTOR CONFIGURATION	SPEEDS	STROKE in / mm	THRUST lbs / N	FIXTURING OPTIONS	ACCESSORIES	RECOMMENDED HOSE SIZE ID in / mm	AIR CONSUMPTION SCFM / l/min
136-150	0.85 / 0.63	Pistol Grip	400, 900, 2100, 3100, 6000, 7800, 11500, 22500	1.5 / 38.1	195 / 38.1	Template Foot - Left Hand, Template Foot - Right Hand, 21k Bushing, 22k Bushing, Jig Collet Foot - Standard, Jig Collet Foot - Depth sensing for countersink, C/D Yoke	See Options	1/2 / 12	30 / 850
120-112	1.2 / 0.9	Pistol Grip	270, 470, 700, 900, 1150, 2200, 3500, 5500, 7000, 14000, 23500	1.125 / 28.6	300 / 1330	Template Foot - Left Hand, Template Foot - Right Hand, 21k Bushing, 22k Bushing, Jig Collet Foot - Standard, Jig Collet Foot - Depth sensing for countersink, C/D Yoke	See Options	1/2 / 12	42 / 1200
120-225	1.2 / 0.9	Pistol Grip	270, 470, 700, 900, 1150, 2200, 3500, 5500, 7000, 14000, 23500	2.25 / 57.2	300 / 1330	Template Foot - Left Hand, Template Foot - Right Hand, 21k Bushing, 22k Bushing, Jig Collet Foot - Standard, Jig Collet Foot - Depth sensing for countersink, C/D Yoke	See Options	1/2 / 12	42 / 1200
180-225	1.8 / 1.3	Pistol Grip	240, 420, 650, 850, 1050, 2000, 3100, 4900, 6300, 12500, 21000	2.25 / 57.2	300 / 1330	Template Foot - Left Hand, Template Foot - Right Hand, 21k Bushing, 22k Bushing, Jig Collet Foot - Standard, Jig Collet Foot - Depth sensing for countersink	See Options	1/2 / 12	63 / 1780

Recoules Quackenbush®
Precision Drilling-Every Time

DESCRIPTION

- Twin spindle drill for nut plate fasteners.
- Large range of pressure feet to suit nut plate designs.
- Capacity: Drill - 0.1285 in / 3 mm, Countersink* - 0.250 in / 6 mm.
- Minimum Countersink Depth Accuracy of ± 0.001 in / ± 0.03 mm.
- Countersink Depth adjustable in 0.001 in / 0.03 mm increments.
- Variable spacing available from 0.3 in / 7.6 mm to 1.0 in / 25.4 mm.
- M Mini Spindle Option for closer centers (0.219 in / 5.6 mm) min.
- Single tool can be used to drill and countersink holes for Single Wing, Double Wing, and Mickey Mouse fasteners by simply changing the spindle support block, lift finger, and pressure foot.
- Pressure foot options to suit nut plate centers.
- Many customizable options, see page 24.

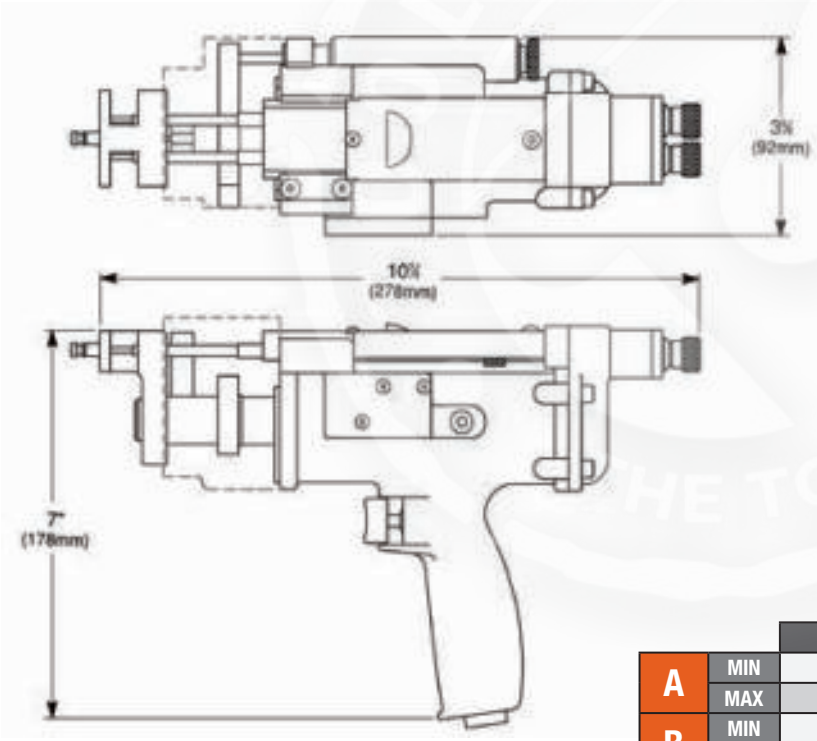

INFORMATION NECESSARY TO ORDER NUT PLATE DRILL

1. Tool rpm _____
2. Type of foot _____
3. Collet to spindle spacing (A) _____
4. Spindle to spindle spacing (B) _____
5. Drill Shank Diameter (C) _____
6. Pilot Hole Diameter: _____
Min. _____
Max. _____
7. Thickness of material to be drilled _____

		SINGLE WING	DOUBLE WING	MICKEY MOUSE
A	MIN	0.344	–	0.212
	MAX	0.679	–	0.500
B	MIN	0.312	0.343	0.300
	MAX	1.000	1.125	1.000

MODEL	NOMINAL POWER hp / kW	MOTOR CONFIGURATION	SPEEDS	STROKE in / mm	THRUST lbs / N	FIXTURING OPTIONS	ACCESSORIES	RECOMMENDED HOSE SIZE ID in / mm
10QNPDM	0.75 / 0.56	Pistol Grip	6000	0.6 / 15.2	180 / 800	Double Wing Single Wing Mickey Mouse	See Options	3/8 / 10
10QNPD	0.75 / 0.56	Pistol Grip	600. 6000	0.6 / 15.2	180 / 800	Double Wing Single Wing Mickey Mouse	See Options	3/8 / 10

Recoules Quackenbush®
Precision Drilling-Every Time

DESCRIPTION

- Portable design and comfort-grip handle.
- Tough, durable construction.
- Low pressure drop.
- Works well with both oil- and water-based cutting tool lubricants.
- Reliable, consistent lubricant application to both the cutting tool and air motor (optional).
- Independent adjustment of fluid and air.

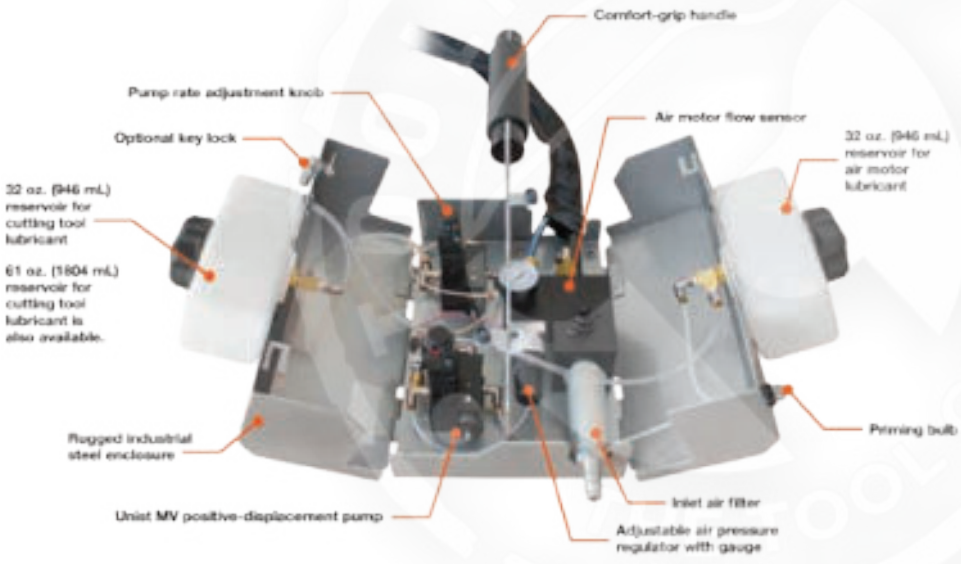

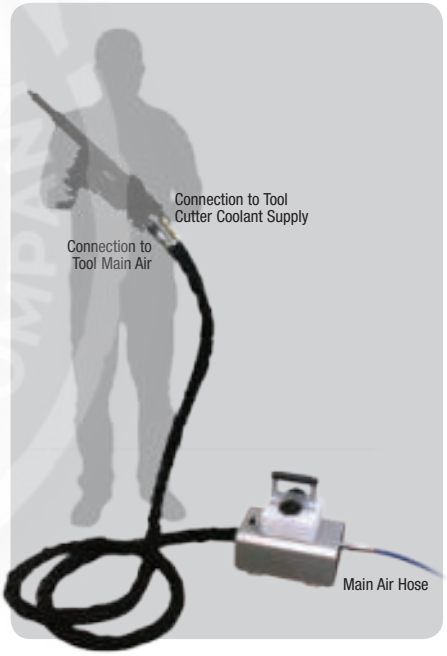

MODEL	COOLANT RESERVOIR	AIR TOOL OIL RESERVOIR
635107PT	0.95 liters / 0.25 gallons	No
635108PT	0.95 liters / 0.25 gallons	Yes

FEATURES VS. ON-BOARD LUBRICATORS

Larger resevoir capacity: 946 mL vs. 55 mL > 17x means less fill-ups and more holes between fill-ups.
More flexible: With the on-board system, one pump can be used with multiple drill units vs. a pump unit for every unit.
Better ergonomics: Keeps tool weight lower with no on-board lubricator.
More durable and reliable lubrication flow: Less opportunity to drill without lubrication.
High-visibility resevoir: Know exactly when to refill.
Higher air pressure: For more reliable lubrication flow.

Recoules Quackenbush®
Precision Drilling-Every Time

DESCRIPTION

- The production costs can be significantly reduced by the use of micro lubrication.
- The reduction of friction and the resulting increase of productivity will allow a more economical processing of workpieces.
- Shorter machine down time by increase of tool life.
- Reduction of disposal costs due to almost dry chips.
- No extra installation for the operation of coolants required - additional energy cost savings.

OUTSIDE LUBRICATION APPLICATOR EQUIPPED WITH BRASS PUMPS

1 Switch: ON / OFF. Optional: solenoid valve, toggle switch, roller valve, drawer distributor.
2 Air control valve: Regulates the air outlet at the nozzle. Each aluminum pump has its own air control valve which can be used independently.
3 Graduation scale of the amount of Lubricant - The adjustment screw regulates the amount of Lubricant necessary.
4 Frequency Generator: Checks the pump cycle frequency. Pneumatic pulse generator: 5-180 strokes / minute. Generator electrical frequency: 1-128 strokes / minute. Solenoid: freely programmable.
5 Metal Housing
6 Mounting System: Pre-drilled holes for fixed installation of the applicator on the machine tool or to schedule are magnets on the metal housing.
7 Air supply: Input pressure: min. 4 bar, max. 10 bar.
8 Air Filter
9 Tank. Capacity: 0.3 L; 1 L, 2 L, 3 L also available with level indicator.
10 Nozzles: Circular saw tape, copper nozzles, steel and Loc-line, flexible metal nozzles, rotating nozzles, and special nozzles.
11 Lubricant

Copper / steel nozzles with adjusting block

Rotative nozzles

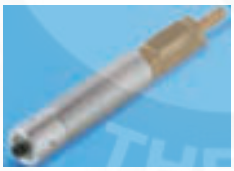

Nozzle tips

Special nozzles

ACCU-LUBE MINI BOOSTER MB 2010 MINI SR

- For tools with oil hole diameter of 1 - ≤ 12 mm or maximum 2 x 6 mm.

TECHNICAL DATA

Operating current: 24 V CC 2W (optional: 110 V, 230 V)
Operating pressure: 5.5 - 9 bars
Reservoir: 500 - 750 ml (optional 950 / 1.400 ml)

Recoules Quackenbush®
Precision Drilling-Every Time

ACCU-LUBE LUBRICANTS - NO HARM TO OPERATORS OR ENVIRONMENT

- Accu-Lube Lubricants which do not leave any stains on the material after post heat treatment.
- The following Accu-Lube lubricants are especially appropriate for processing of ferrous material. Should these Accu-Lube lubricants be used on non-ferrous material, it must be degreased prior to post heat treatment in order to avoid stains on the material.

PROCESSING AREAS	LUBRICANT							
	LB 2000	LB 5000	LB 6000	LB 5500	LB 4500	LB 4000	LB 8000	LB 10000
All Metallic Materials	●	●	●	●	●	●	●	●
Pin+V-Block lubricity test	1.750	1.000	1.250	900	1.250			1.750
Flash point	>300°C	>160°C	214°C	>160°C	191°C	214°C	310°C	>250°C
Pour point	-8° - -5°C	2° - 7°C	-20°C	0° - 3°C	4°C	-20°C	ca. -20°C	<0°C
Viscosity at 40°C	35	18.0	12	20	5	12	36	35
Suitable for Booster system	—	●	●	●	—	●	●	—

QUANTITY	ITEM N°							
	LB 2000	LB 5000	LB 6000	LB 5500	LB 4500	LB 4000	LB 8000	LB 10000
1 liter	70501005	70501205	70501405	70501705	70501905	70501305	70501805	70501505
5 liters	70501010	70501210	70501410	70501710	70501910	70501310	70501810	70501510
20 liters	70501035	70501235	70501435	70501735	70501935	70501335	70501835	70501535
205 liters	70501040	70501240	70501440	70501740	70501940	70501340	70501840	70501540

CHARACTERISTICS OF THESE LUBRICANTS	
LB 2000	For light to heavy cutting operations. Accu-Lube LB 2000 - is manufactured out of natural, highly refined triglycerides.
LB 5000	For medium to heavy cutting operations.
LB 6000	For light to medium-heavy cutting operations. Accu-Lube LB 6000.
LB 5500	For light to medium-heavy cutting operations.
LB 4500	For light cutting operations. Accu-Lube LB 4500 consists of natural ingredients. It is especially appropriate for working in aluminium. Accu-Lube LB 4500 is conditionally suitable for post heat treatment.
LB 4000	For light to medium-heavy cutting operations. Accu-Lube LB 4000 is based on natural fatty acids.
LB 8000	For light to medium-heavy cutting operations. Accu-Lube LB 8000 – is a mixture of natural ingredients.
LB 10000	For light to medium-heavy cutting operations. Accu-Lube LB 8000 is manufactured out of natural, refined triglycerides.

The following Accu-Lube lubricants in solid and paste-like form are especially appropriate for manual application:

ITEM NO.	DESCRIPTION
70501016	Accu-Lube LB 5000 Gel Paste (255 g)
70501015	Accu-Lube LB 5000 Solid Paste (255 g)
70501025	Accu-Lube LB 5000 Solid Block (71 g)
70501030	Accu-Lube LB 5000 Solid Stick (62 g)
70501032	Accu-Lube LB 5000 Solid Stick (368 g)
70501060	Accu-Lube LB 2000 Spray (222 g)
70501360	Accu-Lube LB 4000 Spray (222 g)
70501260	Accu-Lube LB 5000 Spray (222 g)
70501760	Accu-Lube LB 5500 Spray (222 g)
70501560	Accu-Lube LB 10000 Spray (222 g)

TOOL LIFE (ACCORDING TO CONDITIONS SPECIFIED IN USER MANUAL)

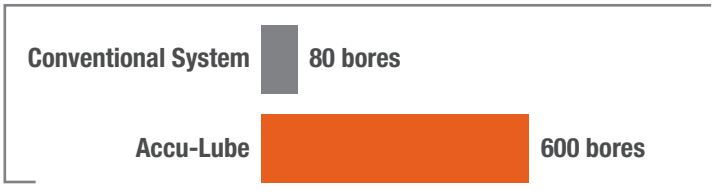

Recoules Quackenbush®
Precision Drilling-Every Time

HOW THE VIBRATORY SYSTEM WORKS

- A small coaxial vibration combined with constant Advanced Drilling feed generates the chip fragmentation allowing a better chip extraction. This vibration is created by a simple mechanical device. The frequency and amplitude of the vibration is defined in function of the application.

BENEFITS

- Small chips generation whatever drilling condition.
- Excellent chips extraction.
- No risk of spoiled surface due to long chip extraction.
- No overload for torque and thrust during drilling operation.
- Predictive tool life cycle thanks to constant solicitations.
- Potential tool life extension.
- Good lubrication and cooling thanks to cut discontinuity.

Compatible Advanced Drilling Equipment with integrated MITIS™ option

	Non Fragmented chips	Fragmented chips
A2V / A2T A1V / A1T 20932 / 42 20952 / 62		

Recoules Quackenbush®
Precision Drilling-Every Time

FIXTURING OPTIONS AND ACCESSORIES	DESCRIPTION		AD MODEL						
			209X2	A1X	A2X	15QR	158QR	230	MINI C
Twist Lock		Bayonet clamping with Optional Vacuum Extraction	●	●	●	●	●	●	—
Concentric Collet		Clamping system in a straight bore hole Lower cost fixture and faster clamping	●	●	●	●	—	—	—
Template Foot		Clamping in the component on an adjacent hole with a template strip for location	●	●	●	—	—	—	—
C Clamping		For holes near a component edge with limited access	●	—	●	●	—	—	●
DASA		DASA attachment for big diameters and long thickness	—	●	—	—	—	●	—
Crowfoot		Offset heads for difficult access Only for right angle	●	●	—	—	—	—	—
Telescopic Spindle		Telescopic spindle for difficult access	—	●	—	●	—	—	●
MITIS™ Internal		For Chip Fragmentation	●	●	●	—	—	●	●
MITIS™ External		For Chip Fragmentation	●	●	●	●	●	●	—
Electronic Counter for Cutter. Maintenance and Overall Life		Helps maintain hole quality and Implement Preventative Maintenance	●	●	●	●	●	●	●
Pneumatic Counter for Cutter Life		Helps maintain hole quality	●	●	●	●	●	●	●
On Board Cutter Lubricator		Helps maintain hole quality	●	●	●	●	●	●	●
Floor Pump Cutter Lubricator		Helps maintain hole quality	●	●	●	●	●	●	●
Pistol Handle		Options for Single and Double trigger to improve ergonomic use	●	—	●	—	—	—	●
Other Handles		On Request to improve ergonomic use	●	●	●	●	●	●	—
Adaptive Control		Improve cycle time and process control in multi layer stacks	●	—	—	●	●	●	—
Cutting Tools		Get a complete drilling solution for optimum hole quality	●	●	●	●	●	●	●

Recoules Quackenbush®
Precision Drilling-Every Time

FIXTURING OPTIONS AND ACCESSORIES	DESCRIPTION	AD MODEL							
		136	120	180	HT	CD	21500/ 120QP	PA/PB	10Q
Twist Lock	Bayonet clamping with Optional Vacuum Extraction	●	●	●	●	●	●	●	—
Concentric Collet	Clamping system in a straight bore hole. Lower cost fixture and faster clamping	●	●	●	●	—	●	—	—
Template Boss	Location in template Fixture	—	—	—	—	●	●	—	—
C-Clamp	For holes near a component edge with limited access	—	—	—	—	—	—	●	—
Push Away	For limited Access	—	—	—	—	—	—	●	—
Twin Hole Drilling for Nut Plates	Single Wing. Double wing with Vacuum Options. Mickey Mouse Wing	—	—	—	—	—	—	—	●
Thrust Booster	Increase thrust by 2.5 times for greater capacity	●	●	●	—	—	—	—	●
Electronic Counter for Cutter. Maintenance and Overall Life	Helps maintain hole quality and Implement Preventative Maintenance	●	●	●	●	●	●	●	●
Pneumatic Counter for Cutter Life	Helps maintain hole quality	●	●	●	●	●	●	●	●
On Board Cutter Lubricator	Helps maintain hole quality	●	●	●	●	●	●	●	●
Floor Pump Cutter Lubricator	Helps maintain hole quality	●	●	●	●	●	●	●	●
Cutting Tools	Get a complete drilling solution for optimum hole quality	●	●	●	●	●	●	●	●

General Drilling Recommendations ---------- 26

Cutter Mounting Type ---------- 27

Cutting Tool Geometry ---------- 28

Attachments ---------- 28

Cutter Configuration Example ---------- 29

Custom-Designed Cutter Application Form ---------- 30

Recoules Quackenbush®
Precision Drilling-Every Time

GENERAL DRILLING RECOMMENDATIONS

BEST HOLE QUALITY

- Thru-the-cutter lubrication; High quality cutter lubricant at manufacturer's recommended rate.
- Drill geometry with split point. 2/4 drill / reamer flute design.
- Review benefits of peck and positive feed.
- For aluminum, use high speed with low feed rate.
- For titanium, steel, etc.- use machining handbook rates for initial trials.
- Verify adequate flow path for chips thru flutes, tool, and fixture.
- Recondition cutters before cutting edge breaks or excessive wear occurs.
- Maintain tool in very good condition.
- Test drill in coupon (sample material) before using in production.
- Personnel must be well-trained and competent.
- "One Shot" operation is usually attainable, but requires very close attention to details.
- Verify cutter quality, proper lubrication rate, replace cutter before becoming dull, replace bushings and service tool regularly.
- "Two Shot" operation - drill followed by ream requires less detailed attention.
- Two operations will produce virtually any hole specification.

COMPOSITE MATERIALS

These materials vary widely in fiber type, resin type, and manufacturing method. Cutter lubrication is always beneficial but may not be permitted. Experimentation is required to optimize drill geometry, speeds, and cutter material.

STACKS OF DIFFERENT MATERIALS

Speeds and feed rates must be lowest and slowest of materials in the stack. Peck Drilling is usually advantageous.

CUTTER MATERIAL

Micrograin Carbide is best for drilling / reaming titanium and carbon fiber. Can also be used for aluminum. More holes per sharpening. M42 High Speed Steel is recommended for drilling precision holes / countersinks in aluminum.

CUTTER COSTS

Some cutter types cost much more than others. It is best to compare cutter costs by the number of holes generated per sharpening, production time, number of operations required, and quality of holes.

RECONDITIONING CUTTERS

Reconditioning is very difficult and tedious. Close attention to detail is mandatory.

Recoules Quackenbush®
Precision Drilling-Every Time

		MOUNTING STYLE	PART N°	THREAD	A		B		C	
					in	mm	in	mm	in	mm
		A	-	-	-	-	-	-	-	-
Straight shank										
External thread with 120° taper	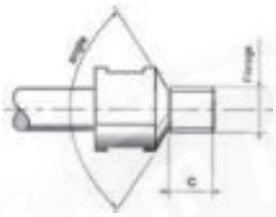	B	B1	1/4 - 28	-	-	-	-	0.32	8.1
		B	B2	5/16 - 24	-	-	-	-	0.39	9.9
		B	B3	3/8 - 24	-	-	-	-	0.47	11.9
		B	B4	7/16 - 20	-	-	-	-	0.47	11.9
		B	B5	9/16 - 18	-	-	-	-	0.63	16
		B	B5	5/8 - 18	-	-	-	-	0.63	16
		B	B7	M6 x 100	-	-	-	-	0.32	8.1
		B	B8	M8 x 100	-	-	-	-	0.32	8.1
		B	B9	M10 x 100	-	-	-	-	0.39	9.9
External thread with pilot Diameter and square face	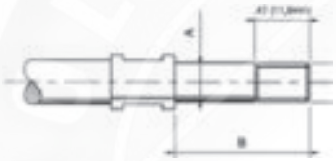	C	C1	M6 x 100	0.244	6.2	0.98	24.9	-	-
		C	C2	M8 x 100	0.323	8.2	1.38	35.1	-	-
		C	C3	M10 x 100	0.402	10.2	1.38	35.1	-	-
		C	C4	M12 x 100	0.48	12.2	1.58	40.1	-	-
		C	C5	M16 x 100	0.638	16.2	1.58	40.1	-	-
Pilot diameter with external thread and 60° taper (PET)	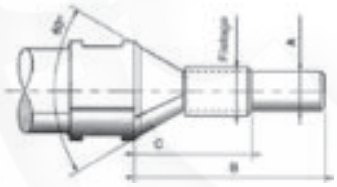	D	D1	5/16 - 24	0.25	6.4	1.06	29.9	0.44	11.2
		D	D2	3/8 - 24	0.3	7.6	1.145	29.1	0.52	13.2
Internal thread (Spacematic style)	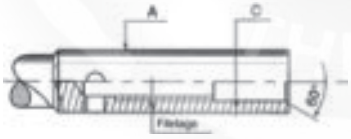	E	E1	1/4 - 28	0.375	9.25	-	-	-	-
		E	E2	1/4 - 28	0.500	12.7	-	-	-	-
		E	E3	1/4 - 28	0.625	15.9	-	-	-	-
		E	E4	3/8 - 16	0.625	15.9	-	-	-	-
Same as style E but with cutter diameter greater than 0.19 in (4.8 mm)	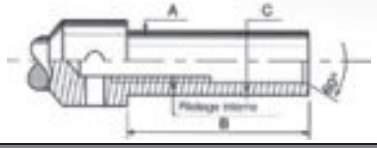	F	F1	1/4 - 28	0.375	9.52	1.22	31	-	-
		F	F2	1/4 - 28	0.500	12.7	1.22	31	-	-
		F	F3	1/4 - 28	0.625	15.9	1.22	31	-	-
		F	F4	3/8 - 16	0.625	15.9	1.22	31	-	-
External thread with pilot diameter & square face location slots for telescopic wrench	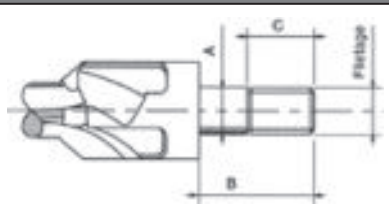	H	H1	M8 x 100	10		16		8.1	
		H	H3	M10 x 100	12.5		19.8		9.9	
		H	H4	M12 x 100	14		23.9		11.9	
		H	H6	M14 x 100	16		27.9		14	
		H	H7	M18 x 100	20		27.9		14	

- The mounting style Morse taper is also available codified under CM1 - CM2 - CM3.
- All cutters are available with oil hole for Thru-coolant lubrication.

Recoules Quackenbush®
Precision Drilling-Every Time

DESCRIPTION	HSS-E	CARBIDE	PCD	ATTACHMENT	CUTTER STYLE	COMMENTS
Drill Only	●	●	● PCD point	All	M	Split Point is standard.
Ream Only **Pre-hole required**	●	●		All	N	Left hand helix. Swarf directed away from cutter ensuring quality of surface finish and hole size.
Drill + Reamer	●	●		All	P	Drill / Reamer produces high quality. accurate hole in one operation. Split Point is standard. Countersink is available.
Square Drill	●	●	●	All	Q	Square Drill is strong, permits good lubrication, and swarf flow. Especially good for deep hole precision and good surface finish. Use in positive feed ADE only. Countersink is available.
Drill + Countersink	●	●	● PCD point	All	R	Drill plus Countersink produces standard hole and countersink in one operation. Split point is standard.
Ream + Countersink **Pre-hole required**	●	●	● PCD point	All	U	Ream-Countersink cutter with pilot for accurate alignment in pre-drilled hole.
Taper-Lock Ream + Countersink **Pre-hole required**	●			B-C-D et H	V	Taper-Lock specifications are based on Briles Aerospace standards. However, many variations exist and complete specifications are required.

ATTACHMENT

A	B	C	D	E	F	H
					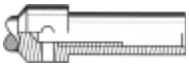	

Example

Recoules Quackenbush®
Precision Drilling-Every Time

B7	1	T	1	2
CUTTER MOUNTING STYLE	OIL HOLE	TYPE OF CUTTER	CUTTER MATERIAL	SPECIFICATION SOURCE

Cutter Mounting Style
(See preceding pages for details)

Solid or Oil-hole
1 - Solid
2 - Oil Hole (for thru-coolant lubrication)

Type of Cutter
(See preceding pages for details)

Cutter Material
1 - HSS-E High Speed Steel
2 - Carbide
3 - PCD

Specification Source
1- Customer Drawing with complete specifications
2- Cutter design by Recoules Quackenbush
Application information provided by customer

- Cutters manufactured to customer specification are not guaranteed for hole diameter unless so stated.
- For optimum results, cutter must be used on specified tool, with recommended cutter lubrication, properly installed, and managed.
- Cutters will be quoted upon request. Please specify quantity. Higher quantities will yield lower unit cost.

Recoules Quackenbush®
Precision Drilling-Every Time

CUTTERS DESIGNED BY RECOULES QUACKENBUSH FOR A SPECIFIC APPLICATION REQUIRE THE FOLLOWING INFORMATION:

Identification - Name or Number:
Customer Identification name or number

First Workpiece Material and Thickness:
Identify first material drilled

- Aircraft alloy aluminum - advise alloy number
- Aircraft alloy titanium - advise alloy number
- Stainless Steel - advise alloy number
- Mild Steel - hardness less than 28 Rc
- Alloy Steel - advise alloy number & hardness
- Composite - advise fiber, resin, and properties
- Other - advise material properties

Alloy Number: _____

Thickness = _____ maximum (inch or mm)

Second Workpiece Material:
Identify second material drilled
Use same code as above

Alloy Number: _____

Thickness = _____ maximum (inch or mm)

Additional Materials or Voids:
Advise if additional materials or open spaces are included.

_____
_____
_____

Hole Diameter:
Advise the exact minimum and maximum acceptable hole diameter - inch or metric

Min.: _____ Max.: _____

Countersink - if applicable:
Advise Countersink maximum diameter and angle:

Diameter: Min.: _____ Max.: _____

Angle: Min.: _____ Max.: _____

Pre-Hole:
Yes: ___ Hole diameter: _____

No: ___

Quantity Required:
Specify quantity or quantities to quote.

Used on ADE Tool:

- Peck Drill
- Positive Feed
- Self Clamping - Variable Spacing
- Self Clamping - Concentric Collet
- Portable Self Feed (CD or 21500)
- Flexirec
- Other: _____
- Model Number: _____

Type of Lubrication:

- Water Soluble Coolant
- Water only
- Acculube/Boelube type Lubricant
- None
- Other - Specify: _____
- Brand & Type: _____

Additional information required:
Other hole quality parameters such as finish.
roundness. straightness.
Special conditions or specifications.
Taperlock Group and specifications.

_____
_____
_____
_____
_____
_____
_____
_____
_____
_____
_____
_____
_____

Recommendation for requesting Quotation: Photo copy this catalog page. Fill in the blanks for each block. Add any supplemental information needed to completely define the application requirement.

DOTCO®
Your Trusted Name
In Material Removal

Pistol Grip Drills | 14 Series ---------- 32

Pistol Grip Drills | 15, 135 Series ---------- 34

Angle Drills | 15 Series ---------- 35

Angle Drills | Other Angle Head Options ---------- 38

Angle Drills | Indexable Quick Change Angle Drills ---------- 39

Inline Drills | 15 Series ---------- 40

Back Spotfacer ---------- 42

Drill Accessories | For M6, M8, M10 Cutters ---------- 43

Drill Accessories | Flat Offset Angle Drill ---------- 44

Cleco® TULMan™ Electronic Counter ---------- 45

Drill Accessories | Jacobs® Chucks, Collet Chucks ---------- 46

Drill Accessories | Drilling Guides - Manual ---------- 47

DOTCO®
Your Trusted Name
In Material Removal

14CF SERIES - NON-REVERSIBLE

- 160 - 29000 rpm
- 0.4 hp / 0.30 kW
- Supplied with Jacobs® Keyed Chuck or Threaded Termination for Keyless Chuck/Collet - options on Page 46.
- Non-reversible.
- Comfort grip with ergonomic finger and thumb guides to aid control.
- Excellent for aerospace, metal fabrication, and woodworking applications.

TERMINATION CAT. NO.			FREE SPEED (rpm)	WEIGHT	LENGTH	AIR INLET SIZE
1/4 in Chuck	3/8 in Chuck	External Thread 3/8 in - 24				
14CFS97-38	14CFS97-51	14CFS97-40	600	1.8 lb / 0.82 kg	6.9 in / 175 mm	1/4 in
14CFS96-38	14CFS96-51	14CFS96-40	700	1.8 lb / 0.82 kg	6.9 in / 175 mm	1/4 in
14CFS95-38	14CFS95-51	14CFS95-40	1000	1.8 lb / 0.82 kg	6.9 in / 175 mm	1/4 in
14CFS94-38	14CFS94-51	14CFS94-40	2400	1.6 lb / 0.73 kg	5.7 in / 145 mm	1/4 in
14CFS93-38	14CFS93-51	14CFS93-40	3200	1.5 lb / 0.68 kg	5.7 in / 145 mm	1/4 in
14CFS92-38	14CFS92-51	14CFS92-40	3800	1.5 lb / 0.68 kg	5.7 in / 145 mm	1/4 in
14CFS91-38	14CFS91-51	14CFS91-40	5200	1.5 lb / 0.68 kg	5.7 in / 145 mm	1/4 in
14CFS90-38	14CFS90-51	14CFS90-40	29000	1.5 lb / 0.68 kg	5.7 in / 145 mm	1/4 in

All tools performance rated @ 90 psi / 620 kPa air pressure.
Minimum Hose I.D.: 5/16 in / 7.9 mm
Drill Diameter Capacity Matches Chuck Size

14CS SERIES - NON-REVERSIBLE

- 500 - 20000 rpm
- 0.6 hp / 0.45 kW
- Supplied with Jacobs® Keyed Chuck or Threaded Termination for Keyless Chuck/Collet - options on Page 46.
- Comfort grip with ergonomic finger and thumb guides to aid control.
- Excellent for aerospace, metal fabrication, and woodworking applications.
- 1/2 in models equipped with dead handle.

TERMINATION CAT. NO.			FREE SPEED (rpm)	WEIGHT	LENGTH	AIR INLET SIZE
1/4 in Chuck	3/8 in Chuck	External Thread 3/8 in - 24				
---	14CSL97-51	14CSL97-40	500	2.9 lb / 1.32 kg	8.1 in / 206 mm	1/4 in
---	14CSL95-51	14CSL95-40	1300	2.9 lb / 1.32 kg	8.1 in / 206 mm	1/4 in
14CSL92-38	---	14CSL92-40	3200	2.1 lb / 0.95 kg	6.3 in / 160 mm	1/4 in
14CSL91-38	---	14CSL91-40	5200	2.1 lb / 0.95 kg	6.3 in / 160 mm	1/4 in
14CSL98-38	---	14CSL98-40	6000	2.1 lb / 0.95 kg	6.3 in / 160 mm	1/4 in
14CSL90-38	---	14CSL90-40	20000	2.1 lb / 0.95 kg	6.3 in / 160 mm	1/4 in

All tools performance rated @ 90 psi / 620 kPa air pressure.
Minimum Hose I.D.: 5/16 in / 7.9 mm
Standard equipment: Jacobs geared chuck, chuck key
Drill Diameter Capacity Matches Chuck Size

DOTCO®
Your Trusted Name
In Material Removal

14CNL SERIES - NON-REVERSIBLE

- 500 - 20000 rpm
- 0.9 hp / 0.67 kW
- Supplied with Jacobs® Keyed Chuck or Threaded Termination for Keyless Chuck/Collet - options on Page 46.
- Comfort grip with ergonomic finger and thumb guides to aid control.
- Excellent for aerospace, metal fabrication, and woodworking applications.
- 1/2 in models equipped with dead handle.

TERMINATION CAT. NO.				FREE SPEED (rpm)	WEIGHT	LENGTH	AIR INLET SIZE
1/4 in Chuck	3/8 in Chuck	External Thread 3/8 in - 24	1/2 in Chuck				
---	14CNL97-51	14CNL97-40	14CNL97-53	500	3.5 lb / 1.59 kg	9.1 in / 231 mm	1/4 in
---	14CNL95-51	14CNL95-40	---	1300	2.8 lb / 1.27 kg	8.6 in / 218 mm	1/4 in
14CNL92-38	14CNL92-51	14CNL92-40	14CNL92-53	3200	2.4 lb / 1.09 kg	7.2 in / 183 mm	1/4 in
---	14CNL91-51	14CNL91-40	---	5200	2.4 lb / 1.09 kg	7.2 in / 183 mm	1/4 in
14CNL98-38	14CNL98-51	14CNL98-40	14CNL98-53	6000	2.2 lb / 1.00 kg	6.8 in / 173 mm	1/4 in
14CNL90-38	---	14CNL90-40	---	20000	2.2 lb / 1.00 kg	6.8 in / 173 mm	1/4 in

All tools performance rated @ 90 psi / 620 kPa air pressure.
Minimum Hose I.D.: 5/16 in / 7.9 mm
Standard equipment: Jacobs geared chuck, chuck key
Drill diameter capacity matches chuck size.

14CHL SERIES - NON-REVERSIBLE

- 3200 - 6000 rpm
- 1.4 hp / 1.04 kW
- Supplied with Jacobs® Keyed Chuck or Threaded Termination for Keyless Chuck/Collet - options on Page 46.
- Powerful motor.
- Rear exhaust.

CAT. NO.	TERMINATION	FREE SPEED (RPM)	WEIGHT	LENGTH	AIR INLET SIZE
14CHL92-38	Chuck 1/4 in	3200	2.6 lb / 1.18 kg	6.5 in / 165 mm	1/4 in
14CHL92-40	Ext. Thread 3/8 in - 24	3200	2.4 lb / 1.09 kg	5.5 in / 140 mm	1/4 in
14CHL92-51	Chuck 3/8 in	3200	2.8 lb / 1.27 kg	7.1 in / 180 mm	1/4 in
14CHL92-53	Chuck 1/2 in	3200	3.8 lb / 1.72 kg	7.4 in / 188 mm	1/4 in
14CHL98-38	Chuck 1/4 in	6000	2.6 lb / 1.18 kg	6.5 in / 165 mm	1/4 in
14CHL98-40	Ext. Thread 3/8 in - 24	6000	2.4 lb / 1.09 kg	5.5 in / 140 mm	1/4 in
14CHL98-51	Chuck 3/8 in	6000	2.8 lb / 1.27 kg	7.1 in / 180 mm	1/4 in
14CHL98-53	Chuck 1/2 in	6000	3.8 lb / 1.72 kg	7.4 in / 188 mm	1/4 in

All tools performance rated @ 90 psi / 620 kPa air pressure.
Drill Diameter Capacity Matches Chuck Size
Minimum hose ID: 5/16 in / 7.9 mm

DOTCO®
Your Trusted Name
In Material Removal

15DP SERIES - NON-REVERSIBLE

- 160 - 1400 rpm
- 1.0 hp / 0.75 kW
- Excellent for slow speed applications.
- Powerful motor.

CAT. NO.	TERMINATION	FREE SPEED (rpm)	WEIGHT	LENGTH	AIR INLET SIZE
15DP-1.6B-53	Chuck 1/2 in	160	6.0 lb / 2.72 kg	9.8 in / 249 mm	3/8 in
15DP-4B-53	Chuck 1/2 in	400	5.5 lb / 2.49 kg	8.5 in / 216 mm	3/8 in
15DP-8B-53	Chuck 1/2 in	800	5.5 lb / 2.49 kg	8.5 in / 216 mm	3/8 in
15DP-14B-49	Chuck 3/8 in	1400	4.5 lb / 2.04 kg	8.3 in / 211 mm	3/8 in

All tools performance rated @ 90 psi / 620 kPa air pressure.
Standard Equipment: Operating instructions and service manual, Dead handles on all models except 15DP-14B, 3-Jaw Chuck, and Key.
General: Air Inlet: 3/8 in NPTF, Minimum Hose Size: 3/8 in, Spindle Thread: 1/2 in - 20, Spindle Offset: Pistol Grip: 31/32 in
Drill Diameter Capacity Matches Chuck Size
Minimum hose ID: 5/16 in / 7.9 mm

135DPV SERIES - VARIABLE SPEED

- 600 - 2600 rpm
- 0.7 hp / 0.5 kW
- Variable speed.
- Calibrated governed speed control.

CAT. NO.	TERMINATION	FREE SPEED (RPM)	GOVERNED RPM RANGE	WEIGHT	LENGTH	AIR INLET SIZE
135DPV-7B-43	Chuck 1/2 in	600	150 - 550	3.6 lb / 1.63 kg	9.6 in / 244 mm	1/4 in
135DPV-7B-50	Chuck 1/2 in	600	150 - 550	3.6 lb / 1.63 kg	9.6 in / 244 mm	1/4 in
135DPV-14B-50	Chuck 1/2 in	1250	400 - 1200	3.4 lb / 1.54 kg	9.3 in / 236 mm	1/4 in
135DPV-14B-51	Chuck 3/8 in	1250	400 - 1200	3.4 lb / 1.54 kg	9.3 in / 236 mm	1/4 in
135DPV-28B-51	Chuck 3/8 in	2600	700 - 2400	3.2 lb / 1.45 kg	8.5 in / 216 mm	1/4 in

All tools performance rated @ 90 psi / 620 kPa air pressure.
Standard Equipment: Operating instructions, service manual, 3-Jaw Chuck, and Key-Jaw Chuck and Key.
General: Air Inlet: 1/4 in NPT, Minimum Hose Size: 1/4 in / 6 mm, Spindle Offset: 25/32 in / 20 mm.
Drill Diameter Capacity Matches Chuck Size.

DOTCO®
Your Trusted Name
In Material Removal

15L14 SERIES - ANGLE DRILL

- 2400 - 3600 rpm
- 0.3 hp / 0.22 kW
- Optional Jacobs® geared chuck.
- Rear exhaust.
- Safety lever.

CAT. NO.	TERMINATION	FREE SPEED (RPM)	TYPE HOUSING	WEIGHT	LENGTH	HEAD HEIGHT	AIR INLET SIZE
15L1487-32	Int. Thread 1/4 in - 28	1500	Composite	1.2 lb / 0.54 kg	8.0 in / 203 mm	3.0 in	1/4 in
15L1487-36	Collet 1/4 in	1500	Composite	1.2 lb / 0.54 kg	8.0 in / 203 mm	3.0 in	1/4 in
15L1487-38	Chuck 1/4 in	1500	Composite	1.5 lb / 0.68 kg	8.0 in / 203 mm	3.0 in	1/4 in
15L1488-36	Collet 1/4 in	2400	Composite	1.6 lb / 0.73 kg	8.7 in / 221 mm	3.0 in	1/4 in
15L1488-38	Chuck 1/4 in	2400	Composite	1.5 lb / 0.68 kg	8.0 in / 203 mm	3.0 in	1/4 in
15L1489-32	Int. Thread 1/4 in - 28	3600	Composite	1.6 lb / 0.73 kg	8.7 in / 221 mm	3.0 in	1/4 in
15L1489-36	Collet 1/4 in	3600	Composite	1.6 lb / 0.73 kg	8.7 in / 221 mm	3.0 in	1/4 in
15L1489-38	Chuck 1/4 in	3600	Composite	1.5 lb / 0.68 kg	8.0 in / 203 mm	3.0 in	1/4 in
15L1489-51	Chuck 3/8 in	3600	Composite	1.5 lb / 0.68 kg	8.0 in / 203 mm	3.0 in	1/4 in
15L1470-37	Chuck 5/32 in	12000	Composite	1.2 lb / 0.54 kg	6.9 in / 175 mm	2.5 in	1/4 in
15L1401-37	Chuck 5/32 in	20000	Composite	1.0 lb / 0.45 kg	6.2 in / 157 mm	2.5 in	1/4 in
15L1471-37	Chuck 5/32 in	20000	Composite	1.2 lb / 0.54 kg	6.9 in / 175 mm	2.5 in	1/4 in

All tools performance rated @ 90 psi / 620 kPa air pressure.
Minimum Hose I.D.: 1/4 in / 6.4 mm
Standard Equipment: Jacobs geared chuck, chuck key
Drill Diameter Capacity Matches Chuck Size

15LF SERIES - LIGHT DUTY HEAD

- 600 - 5300 rpm
- 0.4 hp / 0.30 kW
- Wide array of speeds, head designs, and spindle threads for all applications.
- High-efficiency motor and gear train.
- Comfortable and ergonomic handle.
- Other terminations available (see page 38): -61 10-32 internal thread, -63 threaded collet, -64 5/16 in - 24 thread

CAT. NO.	TERMINATION	FREE SPEED (RPM)	TYPE HOUSING	WEIGHT	LENGTH	AIR INLET SIZE
15LF287-62	Int. Thread 1/4 in - 28	600	Composite	1.9 lb / 0.86 kg	11.8 in / 300 mm	1/4 in
15LF286-62	Int. Thread 1/4 in - 28	750	Composite	1.9 lb / 0.86 kg	11.8 in / 300 mm	1/4 in
15LF285-62	Int. Thread 1/4 in - 28	1000	Composite	1.9 lb / 0.86 kg	11.8 in / 300 mm	1/4 in
15LF284-62	Int. Thread 1/4 in - 28	2400	Composite	1.8 lb / 0.82 kg	11.1 in / 282 mm	1/4 in
15LF283-62	Int. Thread 1/4 in - 28	3300	Composite	1.6 lb / 0.73 kg	10.7 in / 272 mm	1/4 in
15LF282-62	Int. Thread 1/4 in - 28	4000	Composite	1.6 lb / 0.73 kg	10.7 in / 272 mm	1/4 in
15LF281-62	Int. Thread 1/4 in - 28	5300	Composite	1.6 lb / 0.73 kg	10.7 in / 272 mm	1/4 in

All tools performance rated @ 90 psi / 620 kPa air pressure.
Standard Equipment: 600 Series Mini Angle Head with 1/4 in - 28 internal thread

DOTCO®
Your Trusted Name
In Material Removal

15LS SERIES - LIGHT DUTY HEAD

- 500 - 5430 rpm
- 0.6 hp / 0.45 kW
- Wide array of speeds, head designs, and spindle threads for all applications.
- High-efficiency motor and gear train.
- Comfortable and ergonomic handle.

CAT. NO.	TERMINATION	FREE SPEED (RPM)	TYPE HOUSING	WEIGHT	LENGTH	AIR INLET SIZE
15LS287-62	Int. Thread 1/4 in - 28	500	Composite	1.9 lb / 0.86 kg	12.7 in / 323 mm	1/4 in
15LS286-62	Int. Thread 1/4 in - 28	840	Composite	1.9 lb / 0.86 kg	12.7 in / 323 mm	1/4 in
15LS285-62	Int. Thread 1/4 in - 28	1360	Composite	1.9 lb / 0.86 kg	12.7 in / 323 mm	1/4 in
15LS284-62	Int. Thread 1/4 in - 28	1660	Composite	1.9 lb / 0.86 kg	12.7 in / 323 mm	1/4 in
15LS283-62	Int. Thread 1/4 in - 28	2010	Composite	2.3 lb / 1.04 kg	11.5 in / 292 mm	1/4 in
15LS282-62	Int. Thread 1/4 in - 28	3370	Composite	2.3 lb / 1.04 kg	11.5 in / 292 mm	1/4 in
15LS281-62	Int. Thread 1/4 in - 28	5430	Composite	2.3 lb / 1.04 kg	11.5 in / 292 mm	1/4 in

All tools performance rated @ 90 psi / 620 kPa air pressure.
Standard Equipment: 600 Series Mini Angle Head with 1/4 in - 28 internal thread

15LN SERIES - SERIES LIGHT DUTY HEAD

- 540 - 3700 rpm
- 0.4 hp / 0.30 kW

CAT. NO.	TERMINATION	FREE SPEED (RPM)	TYPE HOUSING	WEIGHT	LENGTH	HEAD HEIGHT	AIR INLET SIZE
15LN287-62	Int. Thread 1/4 in - 28	320	Composite	2.5 lb / 1.13 kg	12.0 in / 305 mm	1.0 in	1/4 in
15LN286-62	Int. Thread 1/4 in - 28	540	Composite	2.5 lb / 1.13 kg	13.5 in / 343 mm	1.0 in	1/4 in
15LN285-62	Int. Thread 1/4 in - 28	1000	Composite	2.5 lb / 1.13 kg	12.0 in / 305 mm	1.0 in	1/4 in
15LN284-62	Int. Thread 1/4 in - 28	1530	Composite	2.5 lb / 1.13 kg	12.0 in / 305 mm	1.0 in	1/4 in
15LN283-62	Int. Thread 1/4 in - 28	1850	Composite	2.5 lb / 1.13 kg	12.0 in / 305 mm	1.0 in	1/4 in
15LN282-62	Int. Thread 1/4 in - 28	3100	Composite	2.5 lb / 1.13 kg	12.0 in / 305 mm	1.0 in	1/4 in
15LN281-62	Int. Thread 1/4 in - 28	5000	Composite	2.5 lb / 1.13 kg	12.0 in / 305 mm	1.0 in	1/4 in
15LN288-62	Int. Thread 1/4 in - 28	5600	Composite	2.5 lb / 1.13 kg	12.0 in / 305 mm	1.0 in	

All tools performance rated @ 90 psi / 620 kPa air pressure.
Standard Equipment: 600 Series Mini Angle Head with 1/4 in - 28 internal thread

15LF SERIES - HEAVY DUTY HEAD

- 420 - 3700 rpm
- 0.4 hp / 0.30 kW
- Wide array of speeds, head designs, and spindle threads for all applications.
- High-efficiency motor and gear train.
- Comfortable and ergonomic handle.

CAT. NO.	TERMINATION	FREE SPEED (RPM)	TYPE HOUSING	WEIGHT	LENGTH	AIR INLET SIZE
15LF287-52	Int. Thread 1/4 in - 28	420	Composite	2.0 lb / 0.91 kg	12.0 in / 305 mm	1/4 in
15LF286-52	Int. Thread 1/4 in - 28	525	Composite	2.0 lb / 0.91 kg	12.0 in / 305 mm	1/4 in
15LF285-52	Int. Thread 1/4 in - 28	700	Composite	2.0 lb / 0.91 kg	12.0 in / 305 mm	1/4 in
15LF284-52	Int. Thread 1/4 in - 28	1700	Composite	1.8 lb / 0.82 kg	10.6 in / 269 mm	1/4 in
15LF283-52	Int. Thread 1/4 in - 28	2300	Composite	1.7 lb / 0.77 kg	11.0 in / 279 mm	1/4 in
15LF282-52	Int. Thread 1/4 in - 28	2800	Composite	1.7 lb / 0.77 kg	11.0 in / 279 mm	1/4 in
15LF281-52	Int. Thread 1/4 in - 28	3700	Composite	1.7 lb / 0.77 kg	11.0 in / 279 mm	1/4 in

All tools performance rated @ 90 psi / 620 kPa air pressure.
Standard Equipment: 500 Series Heavy Duty Angle Head with 1/4 in - 28

DOTCO®
Your Trusted Name
In Material Removal

15LS SERIES - HEAVY DUTY HEAD

- 350 - 3800 rpm
- 0.6 hp / 0.45 kW
- Wide array of speeds, head designs, and spindle threads for all applications.
- High-efficiency motor and gear train.
- Comfortable and ergonomic handle.

CAT. NO.	TERMINATION	FREE SPEED (RPM)	TYPE HOUSING	WEIGHT	LENGTH	AIR INLET SIZE
15LS287-52	Int. Thread 1/4 in - 28	350	Composite	2.8 lb / 1.27 kg	12.3 in / 312 mm	1/4 in
15LS286-52	Int. Thread 1/4 in - 28	590	Composite	2.8 lb / 1.27 kg	12.3 in / 312 mm	1/4 in
15LS285-52	Int. Thread 1/4 in - 28	950	Composite	2.8 lb / 1.27 kg	12.3 in / 312 mm	1/4 in
15LS283-52	Int. Thread 1/4 in - 28	1410	Composite	2.4 lb / 1.09 kg	11.0 in / 279 mm	1/4 in
15LS282-52	Int. Thread 1/4 in - 28	2360	Composite	2.4 lb / 1.09 kg	11.0 in / 279 mm	1/4 in
15LS281-52	Int. Thread 1/4 in - 28	3800	Composite	2.4 lb / 1.09 kg	11.0 in / 279 mm	1/4 in

All tools performance rated @ 90 psi / 620 kPa air pressure.
Standard Equipment: 500 Series Heavy Duty Angle Head with 1/4 in - 28

15LN SERIES - HEAVY DUTY HEAD

- 320 - 3900 rpm
- 0.9 hp / 0.67 kW
- Wide array of speeds, head designs, and spindle threads for all applications.
- High-efficiency motor and gear train.
- Comfortable and ergonomic handle.

CAT. NO.	TERMINATION	FREE SPEED (RPM)	TYPE HOUSING	WEIGHT	LENGTH	AIR INLET SIZE
15LN286-52	Int. Thread 1/4 in - 28	540	Composite	3.0 lb / 1.36 kg	12.8 in / 325 mm	1/4 in
15LN285-52	Int. Thread 1/4 in - 28	870	Composite	3.0 lb / 1.36 kg	12.8 in / 325 mm	1/4 in
15LN284-52	Int. Thread 1/4 in - 28	1070	Composite	3.0 lb / 1.36 kg	12.8 in / 325 mm	1/4 in
15LN283-52	Int. Thread 1/4 in - 28	1300	Composite	2.6 lb / 1.18 kg	11.5 in / 292 mm	1/4 in
15LN281-52	Int. Thread 1/4 in - 28	3500	Composite	2.6 lb / 1.18 kg	11.5 in / 292 mm	1/4 in
15LN288-52	Int. Thread 1/4 in - 28	3900	Composite	2.6 lb / 1.18 kg	11.5 in / 292 mm	1/4 in

All tools performance rated @ 90 psi / 620 kPa air pressure.
Standard Equipment: 500 Series Heavy Duty Angle Head with 1/4 in - 28

DOTCO®
Your Trusted Name
In Material Removal

OPTIONAL DRILL ATTACHMENTS

- For use on Dotco 15LF, 15LS, and 15LN series.
- Capacity: 1/4 in Diameter Drill
- These drill attachments can be ordered as a separate accessory item or as part of a complete model. To order as a complete model, use the basic model number from the appropriate 15LF, 15LS, or 15LN catalog page and INDEXlace the termination number (-32 for example) with the termination number of the desired optional attachment (-71 for example) from this page.

PART NO.	TERMINATION	SPINDLE INTERNAL THREAD
COMPACT ANGLE HEAD – 700 SERIES		
1025477	-72	1/4 in - 28
1025476	-73	9/32 in - 40 Collet*
1025668	-74	5/16 in - 24
LIGHT DUTY HEAD – 600 SERIES		
1025314	-61	#10 - 32
1025409	-62	1/4 in - 28
1025313	-63	9/32 in - 40 Collet*
1025528	-64	5/16 in - 24
HEAVY DUTY ANGLE HEAD – 500 SERIES		
1021289	-52	1/4 in - 28
1021292	-53	9/32 in - 40 Collet*
1021291	-54	5/16 in - 24
1025780	-55	3/8 in - 24
45º LIGHT DUTY ANGLE HEAD		
1025730	-42	1/4 in - 28
1025731	-43	9/32 in - 40 Collet*
1025733	-44	5/16 in - 24
360º LIGHT DUTY ANGLE HEAD		
1025696	-91	#10 - 32
1025694	-92	1/4 in - 28

* See page XX for collets

1025447

1025409

1021289

1025730

1025694

PART NO.	DRILL CHUCK	
HEAVY DUTY ANGLE HEAD		
1021620	-59	500 Series Angle Head with drill chuck, 1/4 in capacity
1021620	-59 NC	500 Series Angle Head, no chuck 3/8 in - 24 ext. thread

1021620

DOTCO®
Your Trusted Name
In Material Removal

BASE MODULAR QUICK-CHANGE TOOLS

- 320 - 5300 tr/min
- 15LF: 0.4 hp / 0.3 kW, 15LN: 0.9 hp - 0.7 kW
- Quick-release for range of angle head attachments.
- Can be used for quick-change of: cutter size, drilling speed, head style.
- Pull-back sleeve to change angle head.
- Common drive system retained on power unit.

CAT. NO.	TERMINATION	SPEED		WEIGHT	LENGTH	AIR INLET SIZE
		w/ Q5X HEAD	w/ Q4X, Q6X, Q7X, Q9X HEAD			
15LF281Q	Quick Change Adapter	3700	5300	0.4 hp / 0.3 kW	0.65 kg / 1.43 lbs	1/4 in
15LF282Q	Quick Change Adapter	2800	4000	0.4 hp / 0.3 kW	0.65 kg / 1.43 lbs	1/4 in
15LF283Q	Quick Change Adapter	2300	3300	0.4 hp / 0.3 kW	0.65 kg / 1.43 lbs	1/4 in
15LF284Q	Quick Change Adapter	1700	2400	0.4 hp / 0.3 kW	0.65 kg / 1.43 lbs	1/4 in
15LF285Q	Quick Change Adapter	700	1000	0.4 hp / 0.3 kW	0.65 kg / 1.43 lbs	1/4 in
15LF286Q	Quick Change Adapter	525	750	0.4 hp / 0.3 kW	0.65 kg / 1.43 lbs	1/4 in
15LF287Q	Quick Change Adapter	420	600	0.4 hp / 0.3 kW	0.65 kg / 1.43 lbs	1/4 in
15LN281Q	Quick Change Adapter	3500	5000	0.9 hp / 0.7 kW	1.05 kg / 2.31 lbs	1/4 in
15LN282Q	Quick Change Adapter	2170	3100	0.9 hp / 0.7 kW	1.05 kg / 2.31 lbs	1/4 in
15LN283Q	Quick Change Adapter	1300	1850	0.9 hp / 0.7 kW	1.05 kg / 2.31 lbs	1/4 in
15LN284Q	Quick Change Adapter	1070	1530	0.9 hp / 0.7 kW	1.05 kg / 2.31 lbs	1/4 in
15LN285Q	Quick Change Adapter	870	1240	0.9 hp / 0.7 kW	1.05 kg / 2.31 lbs	1/4 in
15LN286Q	Quick Change Adapter	540	770	0.9 hp / 0.7 kW	1.05 kg / 2.31 lbs	1/4 in
15LN287Q	Quick Change Adapter	320	460	0.9 hp / 0.7 kW	1.05 kg / 2.31 lbs	1/4 in

QUICK-CHANGE ANGLE HEADS

- 45° Light duty angle head.
- Light duty head: 600 Series.
- Heavy duty angle head: 500 Series.
- Compact angle head: 700 Series.
- Heavy duty angle head: 500 Series, drill chuck.
- 360° light duty angle head.

ORDERING CODE	TERMINATION	TYPE	NOTES
302206PT-Q42	1/4 in - 28	45º Light Duty Angle Head	
302206PT-Q43	Collet (9/32 in - 40)	45º Light Duty Angle Head	*Order Collets Separately: See pg. 46
302206PT-Q52	1/4 in - 28	Heavy Duty Angle Head - 500 Series	
302206PT-Q53	Collet (9/32 in - 40)	Heavy Duty Angle Head - 500 Series	*Order Collets Separately: See pg. 46
302206PT-Q59	3/8 in - 24	Heavy Duty Angle Head - 500 Series	
302206PT-Q62	1/4 in - 28	Light Duty Head - 600 Series	
302206PT-Q63	Collet (9/32 in - 40)	Light Duty Head - 600 Series	*Order Collets Separately: See pg. 46
302206PT-Q72	1/4 in - 28	Compact Angle Head - 700 Series	
302206PT-Q73	Collet (9/32 in - 40)	Compact Angle Head - 700 Series	*Order Collets Separately: See pg. 46
302206PT-Q92	1/4 in - 28	360º Light Duty Angle Head	
302206PT-Q93	Collet (9/32 in - 40)	360º Light Duty Angle Head	*Order Collets Separately: See pg. 46

DOTCO®
Your Trusted Name
In Material Removal

15LF SERIES - INLINE

- 600 - 5300 rpm
- 0.4 hp / 0.30 kW
- Optional Jacobs® geared chuck.
- Rear exhaust.
- Safety lever.

EXHAUST CAT. NO.		TERMINATION	FREE SPEED (RPM)	TYPE HOUSING	WEIGHT	LENGTH	AIR INLET SIZE
REAR	FRONT						
15LF087-38		Chuck 1/4 in	600	Composite	1.9 lb / 0.86 kg	8.6 in / 218 mm	1/4 in
15LF087-40		Ext. Thread 3/8 in - 24	600	Composite	1.9 lb / 0.86 kg	8.6 in / 218 mm	1/4 in
15LF086-38		Chuck 1/4 in	750	Composite	1.4 lb / 0.64 kg	8.0 in / 203 mm	1/4 in
—	15LF055-38	Chuck 1/4 in	1000	Composite	1.9 lb / 0.86 kg	8.6 in / 218 mm	1/4 in
15LF085-38		Chuck 1/4 in	1000	Composite	1.4 lb / 0.64 kg	8.0 in / 203 mm	1/4 in
15LF085-40		Ext. Thread 3/8 in - 24	1000	Composite	1.4 lb / 0.64 kg	8.0 in / 203 mm	1/4 in
—	15LF054-38	Chuck 1/4 in	2400	Composite	1.3 lb / 0.59 kg	7.3 in / 185 mm	1/4 in
15LF084-38		Chuck 1/4 in	2400	Composite	1.4 lb / 0.64 kg	8.0 in / 203 mm	1/4 in
—	15LF053-38	Chuck 1/4 in	3300	Composite	1.3 lb / 0.59 kg	7.3 in / 185 mm	1/4 in
15LF083-38		Chuck 1/4 in	3300	Composite	1.4 lb / 0.64 kg	8.0 in / 203 mm	1/4 in
15LF083-40		Ext. Thread 3/8 in - 24	3300	Composite	1.4 lb / 0.64 kg	8.0 in / 203 mm	1/4 in
—	15LF052-38	Chuck 1/4 in	4000	Composite	1.3 lb / 0.59 kg	7.3 in / 185 mm	1/4 in
15LF082-38		Chuck 1/4 in	4000	Composite	1.4 lb / 0.64 kg	8.0 in / 203 mm	1/4 in
15LF082-40		Ext. Thread 3/8 in - 24	4000	Composite	1.4 lb / 0.64 kg	7.3 in / 185 mm	1/4 in
—	15LF051-38	Chuck 1/4 in	5300	Composite	1.3 lb / 0.59 kg	7.3 in / 185 mm	1/4 in
15LF081-38		Chuck 1/4 in	5300	Composite	1.4 lb / 0.64 kg	8.0 in / 203 mm	1/4 in
15LF081-40		Ext. Thread 3/8 in - 24	5300	Composite	1.4 lb / 0.64 kg	8.0 in / 203 mm	1/4 in
15LF080-38		Chuck 1/4 in	28500	Composite	0.9 lb / 0.41 kg	6.3 in / 160 mm	1/4 in

All tools performance rated @ 90 psi / 620 kPa air pressure.
Minimum Hose I.D.: 1/4 in / 6.4 mm
Standard Equipment: Jacobs geared chuck. chuck key
Drill diameter capacity matches chuck size.

DOTCO®
Your Trusted Name
In Material Removal

DESCRIPTION

- Specially designed for all back-spotfacing operations with an accuracy of 0.001 in, with micrometric adjustment.
- Fixed speed (RB 1130 | 60QBSF) or adjustable speed (RB 1130-2 | 70QBSF) for use in light alloys or steel.
- Machine design provides smooth and easy feed without strain on the operator.
- All Recoules Quackenbush standard pilots and back-spotfacing cutters can be used on this machine (see page 84).
- Wide range of interchangeable collets.
- Quick mounting nose-piece provides easy access to collet.
- Feed lever with 360° orientation.

MODEL	MOTOR CONFIGURATION	STD STROKE		STD SPINDLE SPEED RPM	SPOTFACING CAPACITY		ACCESSORIES	CUTTERS
		mm	in		LIGHT ALLOYS	STEEL AND TITANIUM		
RB 1130 / 60QBSF	Pistol Grip	10 mm	3/8 in	460	Ø 30 mm - 1.181 in	Ø 20 mm - 0.787 in	See Collets charts	See page XX
RB 1130-2 / 70QBSF	Pistol Grip	15 mm	0.06 in	150 - 550	Ø 30 mm - 1.181 in	Ø 20 mm - 0.787 in	See Collets charts	See page XX

TECHNICAL DATA

Motor Power: RB1130 / 60QBSF - 0.6 hp / 0.4 kW, RB1130-2 / 70QBSF - 0.7 hp / 0.5 kW
Air Pressure: 90 psi / 6.3 bar
Recommended Hose Size: 3/8 in / 10 mm

DOTCO®
Your Trusted Name
In Material Removal

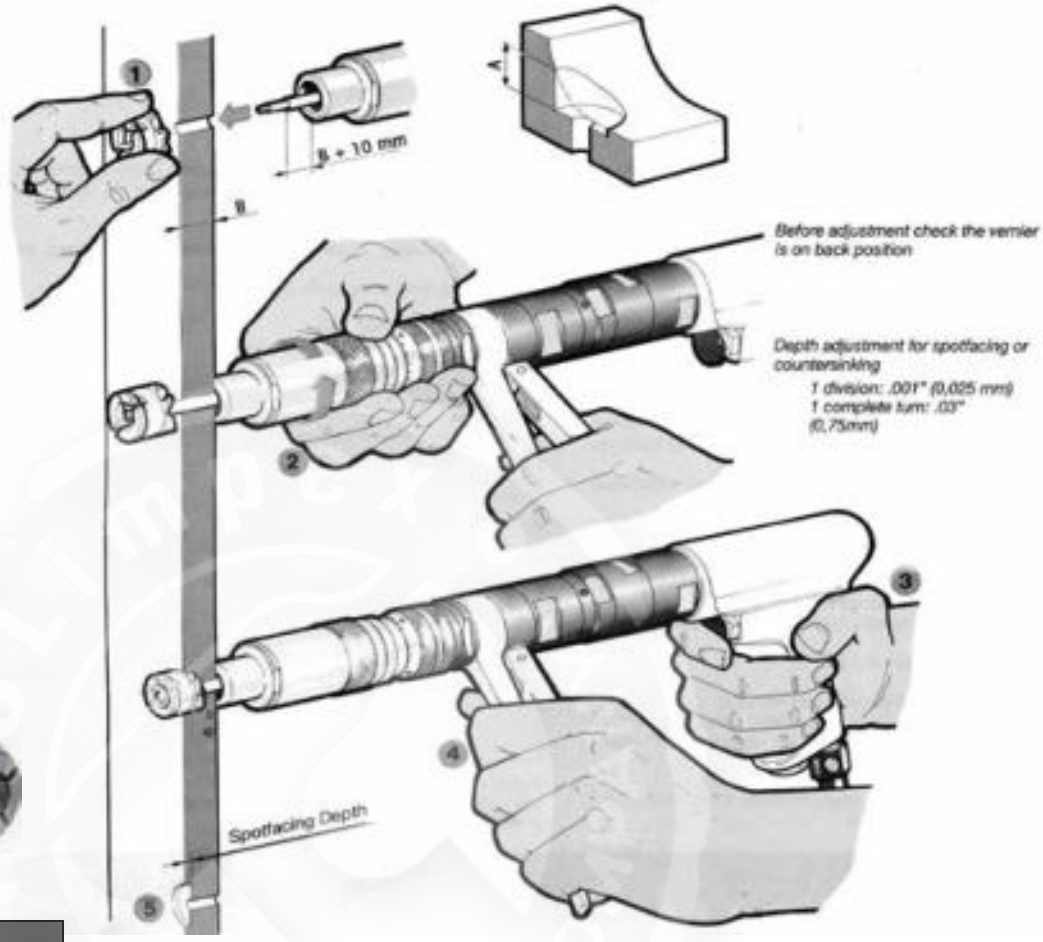

STANDARD COLLETS		
STANDARD DIAMETER		CODE COLLET
mm	in	
2	0.0787	70110200
2.5	0.098	70110250
3	0.1181	70110300
3.5		70110350
4	5/32	70110400
4.8	3/16	70110480
5	0.1968	70110500
5.5		70110550
6	0.2362	70110600
6.35	1/4	70110635
7.94	5/16	70110794
9.52	3/8	70110952

How to order a collet dia 3.17 mm

Basic Code: **70.110**

+

Collet dia in 100th of mm: **317**

70.110.317

Code to indicate

Alternative collets diameters available on request.

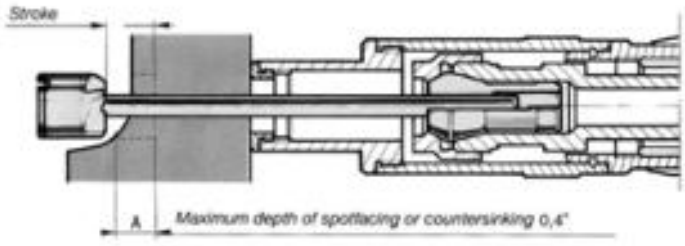

EXPERT ADVICE

- Precise backspotfacing and countersinking operation with the micrometric adjustment similar to the Recoules cages.
- Cutters and Pilots, see page 84.

Recoules Quackenbush®
Precision Drilling-Every Time

PRECISE MANUFACTURE

In some cases, microstop cages are impractical or too bulky to be used.
We recommended fitting our cutters to the drilling equipment by means of the following adapters:

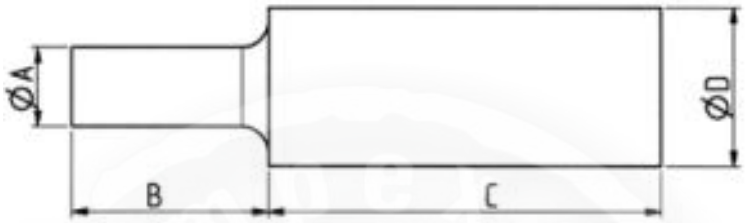

FOR CUTTER THREAD	Ø A mm	Ø A in	B mm	C mm	Ø D mm	CODE	
M6 x 1	4	0.157	15	15	10	10090000	
M6 x 1	6	0.236	20	30	10	10090050	
M8 x 1	6	0.236	20	30	12	10090055	
M8 x 1	8	0.315	20	30	14	10090100	
M10 x 1	10	0.394	20	30	14	10090150	

EXPERT ADVICE

- For use with pistol tools, see pages 32-34.
- Cutters, see pages 74-82.

On request, we can supply all special adapters with a morse taper #1, #2, or #3.

Recoules Quackenbush®
Precision Drilling-Every Time

Using cutters of UNF 10-32F thread

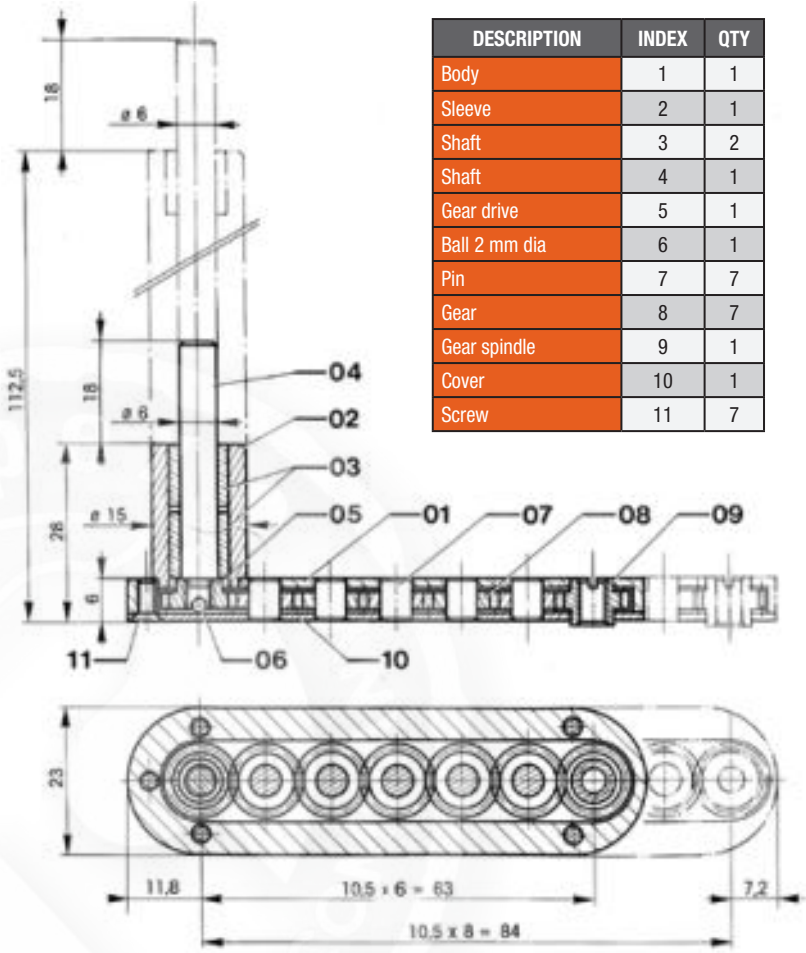

DESCRIPTION	INDEX	QTY
Body	1	1
Sleeve	2	1
Shaft	3	2
Shaft	4	1
Gear drive	5	1
Ball 2 mm dia	6	1
Pin	7	7
Gear	8	7
Gear spindle	9	1
Cover	10	1
Screw	11	7

TOOL ATTACHMENT	A	B	CODE
UNF 10-32 F	84	28	10080005
	84	112.5	10080010
	63	28	10080015
	63	112.5	10080020

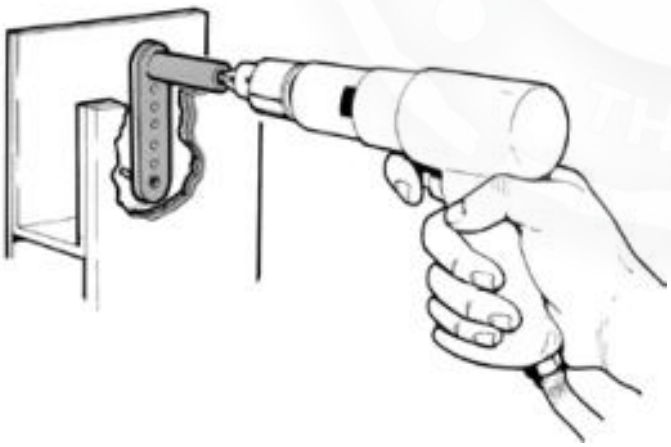

TECHNICAL DATA

Shank diameter: 0.236 in / 6 mm
Maximum drilling capacity: 0.197 in / 5 mm
Maximum countersinking capacity: 0.594 in / 15 mm
Weight: 105 - 220 g

EXPERT ADVICE

- For use with pistol grip tools, see pages 32-34.
- Cutters, see page 96.

On request, we can supply special offset angle drill to customer specifications.
Please contact your normal customer service representative and indicate dimensions A and B when ordering.

Cleco®
Innovation In
Assembly Productivity

SIMPLE AND EASY INSTALL

Simple and easy to install on any small pneumatic tool, the Cleco TULMan allows you to know **when and how often** your tools are used for calibration, service, and overall life. This device can also be used to **monitor** consumables and productivity.

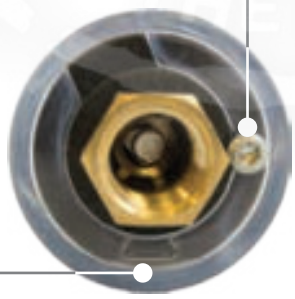

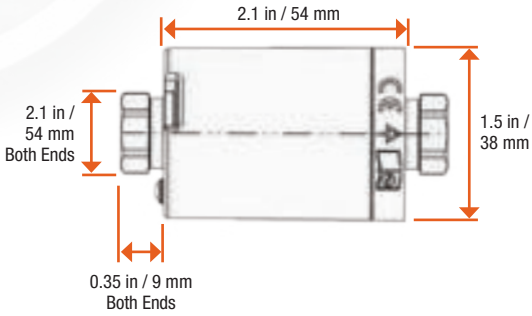

PART NUMBER	MAX PRESSURE	MIN FLOW	MAX FLOW	WEIGHT	CONNECTION
240461PT	100 psi / 6.9 bar	5 cfm / 145 lpm	20 cfm / 570 lpm	2.8 oz / 80 g	1/4 in NPT

DOTCO®
Your Trusted Name
In Material Removal

COLLET CHUCK - MINI

- To adapt female thread termination to a collet.

SHANK SIZE	ASSEMBLY	COLLET
1/8 in	14-1102*	14-0158**
1/4 in	14-1104*	14-0168***
6 mm	14-1094*	14-0170***

** For 1/4 in - 28 Internal Thread*
*** For 5/16 in - 24 Internal Thread – 1/8 in Collet*
**** For 3/8 in - 24 Internal Thread – 1/4 in Collet*

COLLET CHUCK - STANDARD

PART NO.	DRILL SIZE
863810	3/16 in
863806	1/4 in

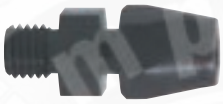

CONE JAW CHUCK

- To adapt female thread termination to a chuck.

PART NO.	DESCRIPTION
1020699	1/4 in capacity with a 1/4 in - 28 male thread

300 SERIES COLLET CHUCK

- Use with standard collet: 1/4 in (#308).
- Termination number: -36
- To adapt male thread termination to a collet.

PART NO.	DESCRIPTION
14-1148	1/64 in - 1/4 in capacity with a 5/16 in - 24 female thread

QUICK-CHANGE CHUCK

- To adapt male thread termination to a 1/4 in hex.

PART NO.	THREAD SIZE	CAPACITY
QRA-08	3/8 in - 24	1/4 in Hex

CLECO TULMan™

- www.ClecoTools.com/TULMan

PART NUMBER	MAX PRESSURE	MIN FLOW	MAX FLOW	WEIGHT	CONNECTION
240461PT	100 psi / 6.9 bar	5 cfm / 145 lpm	20 cfm / 570 lpm	2.8 oz / 80 g	1/4 in NPT

JACOBS® CHUCKS

MODEL NUMBER	TYPE		CAPACITY	TERMINATION
1005078	With Key	1/4 in	6.3 mm	3/8 in - 24
1001505	With Key	1/4 in HD	6.3 mm	3/8 in - 24
1001252	With Key	3/8 in	9.5 mm	3/8 in - 24
1009726	With Key	1/2 in	12.7 mm	3/8 in - 24
33633	Keyless	5/16 in	8.0 mm	3/8 in - 24
33663D	Keyless	25/64 in	10.0 mm	3/8 in - 24

COLLETS FOR ANGLE DRILLS

- For use on Dotco 15LF. 15LS & 15LN right angle drills with 9/32 in - 40 spindles.

COLLETS	DRILL		
CAT NO	SIZE	DEC.	mm
1006408	53	0.060	1.51
1005180	1/16	0.063	1.59
1006412	51	0.067	1.70
1005875	46	0.081	2.06
1005182	3/32	0.094	2.38
1005684	40	0.098	2.49
1006395	39	0.100	2.53
1005183	7/64	0.109	2.78
1005873	31	0.12	3.05
1005184	1/8	0.125	3.18
1013904	30	0.129	3.26
1005185	9/64	0.141	3.57
1005872	27	0.144	3.66
1005186	5/32	0.156	3.97
1005926	22	0.157	3.99
1005682	21	0.159	4.04
1005876	20	0.161	4.09
1006035	19	0.166	4.22
1005187	11/64	0.172	4.37
1005977	17	0.173	4.39
1005927	13	0.185	4.70
1005188	3/16	0.188	4.76
1005871	12	0.189	4.80
1006001	11	0.191	4.85
1005681	10	0.194	4.91

Recoules Quackenbush®
Precision Drilling-Every Time

DESCRIPTION AND ADVANTAGES

- The RB 240 is an injection molded polyamide nylon tripod with a knurled steel sleeve, especially designed to use on any surface.
- The RB 245 is an injection molded polyamide nylon quadripod with a knurled steel sleeve and interchangeable aluminum mounting base (code number 90820085) with 4 nylons studs (code number 93045030). Especially designed to use on curved components. The operator has direct control over perpendicularity as three legs only out of four are in contact with the surface when the tool position is not correct.
- These drill guides, simple and sturdy, can be fitted with a removable drill bush of tempered high speed steel.
- The drill bush is slide fit to H7g6 with a m6 fit on the last 3 mm.

EXPERT ADVICE

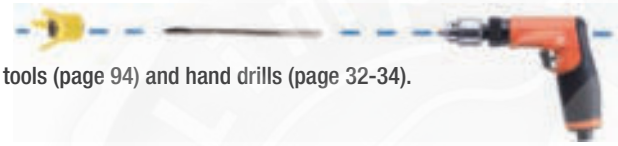

- For use with our cutting tools (page 94) and hand drills (page 32-34).

DRILLING GUIDES	CODE NUMBER
Tripod RB 240	70300005
Quadripod RB 245	70300010

DESCRIPTION AND ADVANTAGES

- We can supply all drilling bushes from 0.039 in up to 0.47 in dia.
- All our bushes are manufactured with a tolerance of +0.0006 in / +0 on the nominal diameter.

How to order

For ≤ 0.3933 in

Example :

Bush 0.1275 in dia
Mini dia 0.1275 in dia
Maxi dia 0.1281 in dia

Basic Code: 70.310 + Collet dia in 100th of mm: 324

70310324
Code to indicate

How to order

For dia 0.3937 in to 0.4724 in

Example :

Bush 0.4468 in dia
Mini dia 0.4468 in dia
Maxi dia 0.4474 in dia

Basic Code: 70.311 + Collet dia in 100th of mm: 135

70311135
Code to indicate

Recoules Quackenbush®
Precision Drilling-Every Time

Microstop Cages | RB 156 ---------- 51

Microstop Cages | RB 206, RBI 206 ---------- 52

Microstop Cages | RB 256, RBI 256 ---------- 54

Ball-Type Microstop Cages | RB 257 ---------- 56

Ball-Type Microstop Cages | RB 258, RBI 258 ---------- 58

Microstop Cages | RB 306 - Large Window ---------- 60

Microstop Cages | RB 306 - Small Window ---------- 61

Ball-Type Microstop Cages | RB 307, RBI 307 - Large Window ---------- 62

Ball-Type Microstop Cages | RB 307, RBI 307 - Small Window ---------- 63

Microstop Cages | RB 356 HP 21, RBI 356 HPI 21 - Large Window ---------- 64

Microstop Cages | RB 356 HP 21, RBI 356 HPI 21 - Small Window ---------- 65

Microstop Cages | RB 356 HP38, RBI 356 HPI 38 - Large Window ---------- 66

Microstop Cages | RB 356 HP38, RBI 356 HPI 38 - Small Window ---------- 67

Microstop Cages | RB 356 HP58, RBI 356 HPI 58 ---------- 68

Microstop Cages | RB 406 ---------- 70

Drill Holder | For Use with Microstop Cages ---------- 72

Recoules Quackenbush®
Precision Drilling-Every Time

RB 156

RB 256

RB 406

RB 356 HP 38

MICROSTOP CAGE	SHANK DIA.	CUTTER THREAD	STROKE	Ø EXT. MAXI	TOTAL LENGTH	
					MINI	MAXI
RB 156	Ø 4.8 mm - 0.19 in dia	M6 x 1	3.5 mm - 0.14 in	Ø 25 mm - 1 in dia	51 mm - 2 in	55 mm - 2.16 in
RB 206	Ø 6 mm - 0.24 in dia	M6 x 1	6 mm - 0.24 in	Ø 21 mm - 0.826 in dia	95 mm - 3.74 in	101 mm - 3.97 in
RBI 206	Ø 6 mm - 0.24 in dia	1/4 in - 28 F	6 mm - 0.24 in	Ø 21 mm - 0.826 in dia	95 mm - 3.74 in	101 mm - 3.97 in
RB 256	Ø 6 mm - 0.24 in dia	M6 x 1	7.5 mm - 0.3 in	Ø 28 mm - 1.1 in dia	91 mm - 3.58 in	98 mm - 3.85 in
RBI 256	Ø 6 mm - 0.24 in dia	1/4 in - 28 F	7.5 mm - 0.3 in	Ø 28 mm - 1.1 in dia	91 mm - 3.58 in	98 mm - 3.85 in
RB 257	Ø 6 mm - 0.24 in dia	M6 x 1	6 mm - 0.24 in	Ø 29 mm - 1.14 in dia	88 mm - 3.46 in	92 mm - 3.62 in
RB 258	Ø 6.35 mm - 1/4 in dia	M6 x 1	27 mm - 1.06 in	Ø 29 mm - 1.14 in dia	141 mm - 5.55 in	156 mm - 6.14 in
RBI 258	Ø 6.35 mm - 1/4 in dia	1/4 in - 28 F	27 mm - 1.06 in	Ø 29 mm - 1.14 in dia	141 mm - 5.55 in	156 mm - 6.14 in
RB 306	Ø 6 mm - 0.24 in dia	M8 x 1	7.5 mm - 0.3 in	Ø 28 mm - 1.1 in dia	91 mm - 3.58 in	98 mm - 3.85 in
RB 307	Ø 6 mm - 0.24 in dia	M8 x 1	7 mm - 0.28 in	Ø 29 mm - 1.14 in dia	88 mm - 3.46 in	98 mm - 3.62 in
RBI 307	Ø 6 mm - 0.24 in dia	1/4 in - 28 F	7 mm - 0.28 in	Ø 29 mm - 1.14 in dia	88 mm - 3.46 in	98 mm - 3.62 in
RB 406	Ø 6 mm - 0.24 in dia / JTI	M10 x 1	14 mm - 0.55 in	Ø 36 mm - 1.42 in dia	136 mm - 5.35 in	163 mm - 6.42 in
RB 356 HP 21	Ø 6 mm - 0.24 in dia / JTI	M6 x 1	21 mm - 0.83 in	Ø 27 mm - 1.06 in dia	116 mm - 4.57 in	136 mm - 5.35 in
RB 356 HPI 21	Ø 6 mm - 0.24 in dia / JTI	1/4 in - 28 F	21 mm - 0.83 in	Ø 27 mm - 1.06 in dia	116 mm - 4.57 in	136 mm - 5.35 in
RB 356 HP 38	Ø 6 mm - 0.24 in dia / JTI	M6 x 1	38 mm - 1.5 in	Ø 27 mm - 1.06 in dia	183 mm - 7.2 in	168 mm - 6.61 in
RB 356 HPI 38	Ø 6 mm - 0.24 in dia / JTI	1/4 in - 28 F	38 mm - 1.5 in	Ø 27 mm - 1.06 in dia	183 mm - 7.2 in	168 mm - 6.61 in
RB 356 HP 58	Ø 6 mm - 0.24 in dia / JTI	M10 x 1	58 mm - 2.28 in	Ø 38 mm - 1.5 in dia	264 mm - 10.4 in	292 mm - 11.5 in
RB 356 HPI 58	Ø 6 mm - 0.24 in dia / JTI	7/16 in - 20 F	58 mm - 2.28 in	Ø 38 mm - 1.5 in dia	264 mm - 10.4 in	292 mm - 11.5 in

Recoules Quackenbush®
Precision Drilling-Every Time

ADVANTAGES

- Different mounting bases available.
- Reduced dimensions for tight access areas.
- For special composites ➔ mounting base with vacuum.

PRECISION MANUFACTURING

- Cemented, hardened, and ground chrome-nickel steel spindle mounted on a self-lubricating bronze body and a thrust bearing.
- Centering cone of the cutter (120°) for perfect concentricity.
- Microstop depth adjustment (1 scale division = 0.001 in).
- Microstop depth setting is held securely in place by locknut with seal. This patented feature allows an easy loosening of the locknut without damage to the drill cage.

Basic Drill Cage

LARGE WINDOW

Tapped Mounting Base
90815170W

Offset Mounting Base
90815175W

SMALL WINDOW

Tapped Mounting Base
90815170

Offset Mounting Base
90815175

Nose Piece

(Pictures are for illustration purposes only)

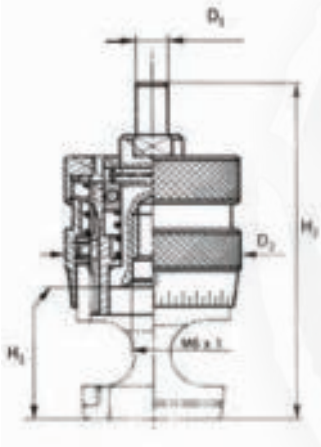

Dimensions for
large and small window

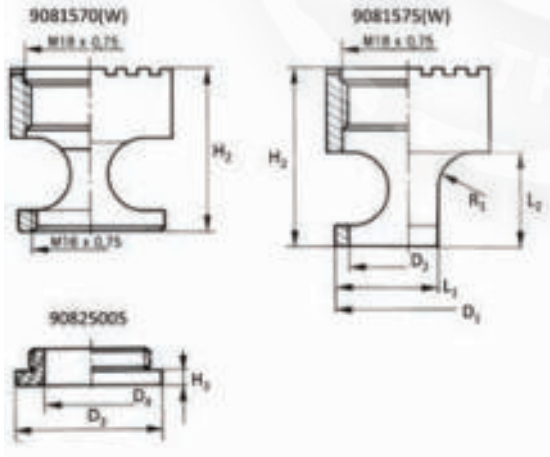

MICROSTOP CAGE									
RB 156	T		D1	D2	H1		H2		Stroke
					Min	Max	Min	Max	
	M6 x 1	mm	4.8	25	20	24	51	55	3.5
		in	0.19	0.98	0.79	0.94	2.01	2.17	0.14

MOUNTING BASE		D1	D2	L1	L2	H2	R1	D6
90815170(W)	mm	NA	NA	NA	NA	22	NA	NA
	in	NA	NA	NA	NA	0.87	NA	NA
9081575(W)	mm	20	16	14	13	24	13	NA
	in	0.79	0.63	0.55	0.51	0.94	0.51	NA

NOSE PIECE		D3	D4	H3
90825005	mm	20	12.5	2
	in	0.79	0.49	0.08

RB 156		MICROSTOP CAGE ASSEMBLY CODE			
		10000010	10000010W	10000100	10000100W
Basic Drill Cage		●	●	●	●
Tapped Mounting Base	90815170	●			
Tapped Mounting Base Large Window	90815170W		●		
Offset Mounting Base	90815175			●	
Offset Mounting Base Large Window	90815175W				●
Nylon Nose Piece	90825005	●	●		

Recoules Quackenbush®
Precision Drilling-Every Time

ADVANTAGES

- Different mounting bases available.
- Reduced dimensions for tight access areas.
- For special composites ➔ mounting base with vacuum.

PRECISION MANUFACTURING

- Cemented, hardened, and ground chrome-nickel steel spindle mounted on a self-lubricating bronze body and thrust bearing.
- Centering cone of the cutter (120°) for perfect concentricity.
- Microstop depth adjustment (1 scale division = 0.001 in).
- Microstop depth setting is held securely in place by locknut with seal.
  This patented feature allows an easy loosening of the locknut without damage to the drill cage.

(Pictures are for illustration purposes only)

RB 206		MICROSTOP CAGE ASSEMBLY CODE									
		10005000W	10005000	10005200W	10005200	10005305W	10005305	10005001W	10005001	10005306W	10005306
RBI 206		10005050W	10005050	10005250W	10005250	10005355W	10005355	10005051W	10005051	10005356W	10005356
Basic Drill Cage		●	●	●	●	●	●	●	●	●	●
Mounting Base Flat Bearing Large Window	90815005W	●									
Mounting Base Flat Bearing	90815005		●								
Offset Mounting Base Large Window	90815015W			●							
Offset Mounting Base	90815015				●						
Tapped Mounting Base Large Window	90815020W					●					
Tapped Mounting Base	90815020						●				
Mounting Base Flat Bearing Large Window w/ Vacuum	90815003W							●			
Mounting Base Flat Bearing With Vacuum	90815003								●		
Tapped Mounting Base Large Window w/ Vacuum	90815018W									●	
Tapped Mounting Base w/ Vacuum	90815018										●
Nylon Nose Piece	90825005					●	●			●	●

Recoules Quackenbush®
Precision Drilling-Every Time

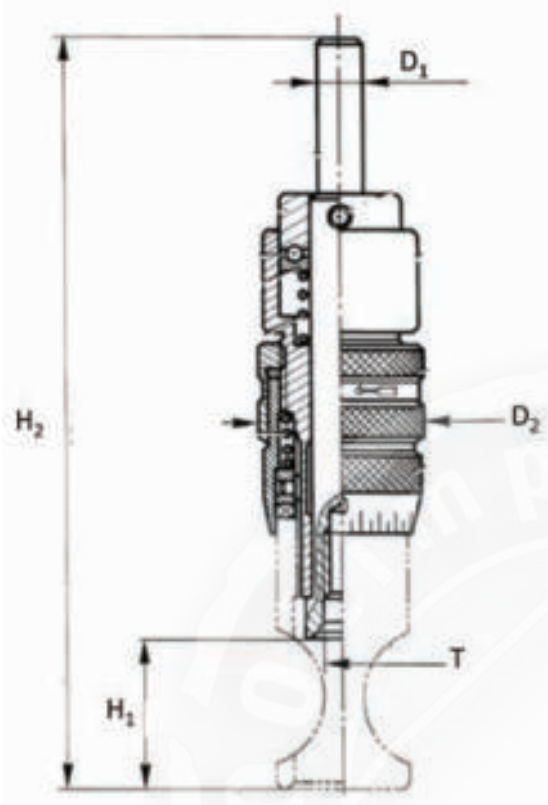

MICROSTOP CAGE									
					H1		H2		Stroke
	T		D1	D2	Min	Max	Min	Max	
RB 206	M6 x 1	mm	6	21	19	25	95	101	6
RBI 206	1/4 in - 28	in	0.24	0.83	0.75	0.98	3.74	3.98	0.24

MOUNTING BASE								
		D1	D2	L1	L2	H2	R1	D6
90815005(W)	mm	17	12.5	NA	NA	35	NA	NA
	in	0.67	0.49	NA	NA	1.38	NA	NA
90815015(W)	mm	17	12.5	11	19	35	8	NA
	in	0.67	0.49	0.43	0.75	1.38	0.31	NA
90815020(W)	mm	20	NA	NA	NA	33	NA	NA
	in	0.79	NA	NA	NA	1.30	NA	NA
90815003(W)	mm	17	12.5	NA	NA	35	NA	16
	in	0.67	0.49	NA	NA	1.38	NA	0.63
90815018(W)	mm	20	NA	NA	NA	34	NA	16
	in	0.79	NA	NA	NA	1.34	NA	0.63

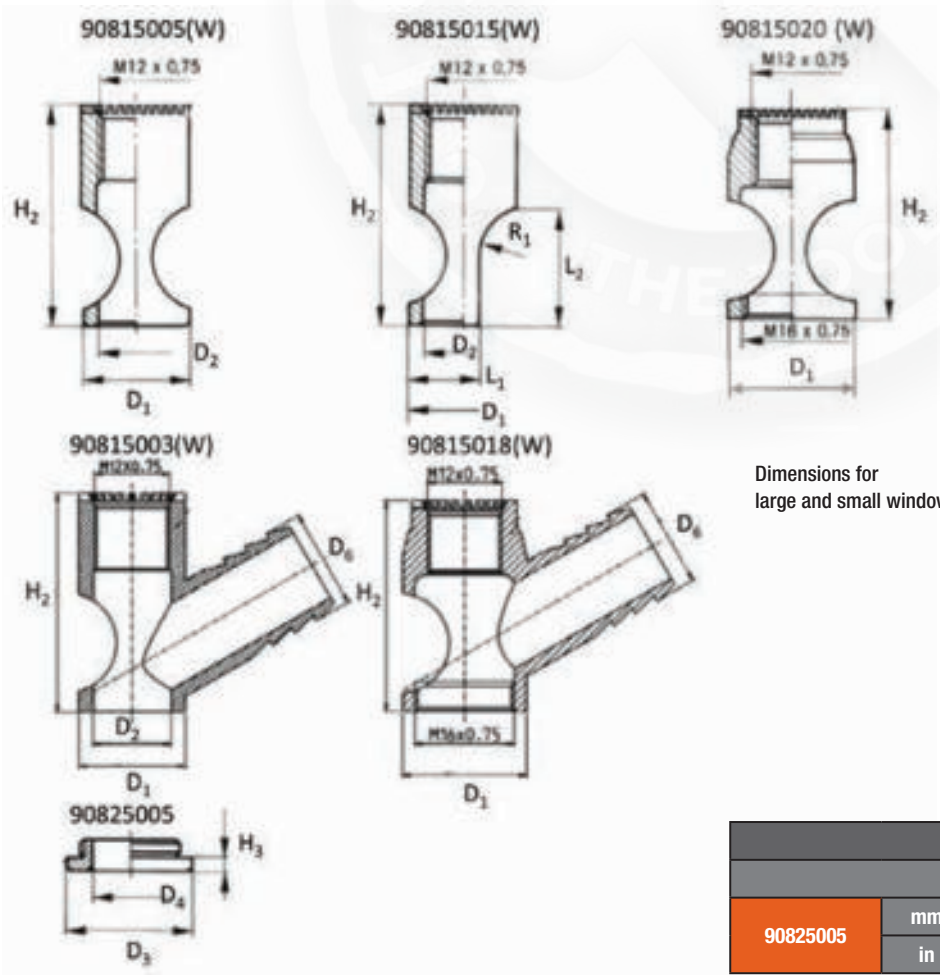

Dimensions for
large and small window

NOSE PIECE				
		D3	D4	H3
90825005	mm	20	12.5	2
	in	0.79	0.49	0.08

Recoules Quackenbush®
Precision Drilling-Every Time

ADVANTAGES

- Different mounting bases available
- Reduced dimensions for tight access areas
- For special composites ➔ mounting base with vacuum.

PRECISION MANUFACTURING

- Cemented, hardened, and ground chrome-nickel steel spindle mounted on a self-lubricating bronze body and a thrust bearing.
- Centering cone of the cutter (120°) for perfect concentricity.
- Microstop depth adjustment (1 scale division = 0.001 in).
- Microstop depth setting is held securely in place by locknut with seal.
  This patented feature allows an easy loosening of the locknut without damage to the drill cage.

(Pictures are for illustration purposes only)

RB 256		MICROSTOP CAGE ASSEMBLY CODE									
		10010010W	10010010	10010015W	10010015	10010001W	10010001	10010016W	10010016	10010205W	10010205
RBI 256		10010110W	10010110	10010115W	10010115	10010111W	10010111	10010116W	10010116		
Basic Drill Cage		●	●	●	●	●	●	●	●	●	●
Tapped Mounting Base Large Window	90815060W	●		●							
Tapped Mounting Base	90815060		●		●						
Tapped Mounting Base Large Window w/ Vacuum	90815063W					●		●			
Tapped Mounting Base w/ Vacuum	90815063						●		●		
Threaded Mounting Base Large Window w/ Vacuum	90815098W									●	
Threaded Mounting Base w/ Vacuum	90815098										●
Hard Chrome Steel Nose	90825015	●	●			●	●				
Nylon Nose Piece	90825020			●	●			●	●		
Nylon Nose Piece	90825085									●	●

Recoules Quackenbush®
Precision Drilling-Every Time

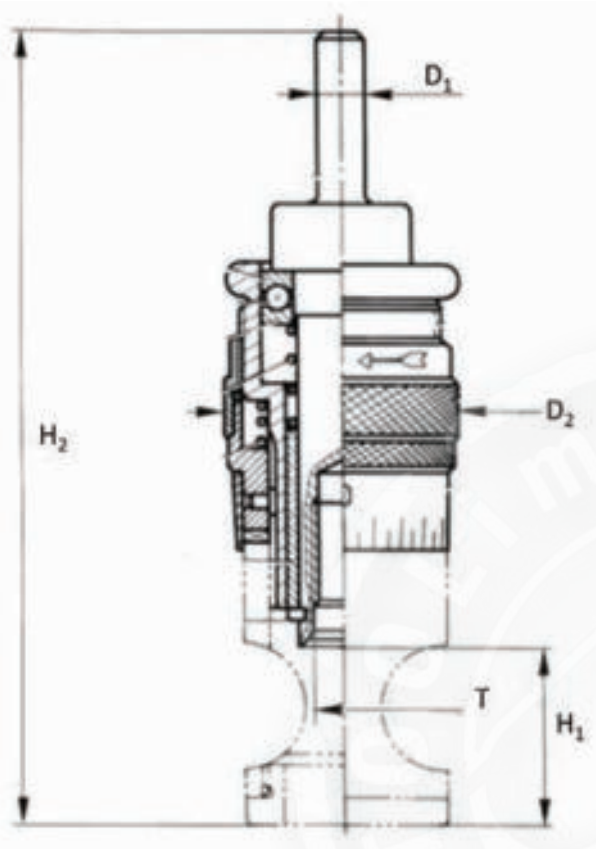

Dimensions for
large and small window

MICROSTOP CAGE									
					H1		H2		Stroke
	T		D1	D2	Min	Max	Min	Max	
RB 256	M6 x 1	mm	6	28	19	26	91	98	7.5
RBI 256	1/4 in - 28	in	0.24	1.10	0.75	1.02	3.58	3.86	0.30

MOUNTING BASE								
		D1	D2	L1	L2	H2	R1	D6
90815060(W)	mm	NA	NA	NA	NA	32	NA	NA
	in	NA	NA	NA	NA	1.26	NA	NA
90815063(W)	mm	24	NA	NA	NA	32	NA	16
	in	0.94	NA	NA	NA	1.26	NA	0.63
90815098(W)	mm	NA	26	NA	NA	32	NA	16
	in	NA	1.02	NA	NA	1.26	NA	0.63

NOSE PIECE				
		D3	D4	H3
90825015	mm	24	15	3
	in	0.94	0.59	0.12
90825020	mm	24	15	3
	in	0.94	0.59	0.12
90825085	mm	36	26	3
	in	1.42	1.02	0.12

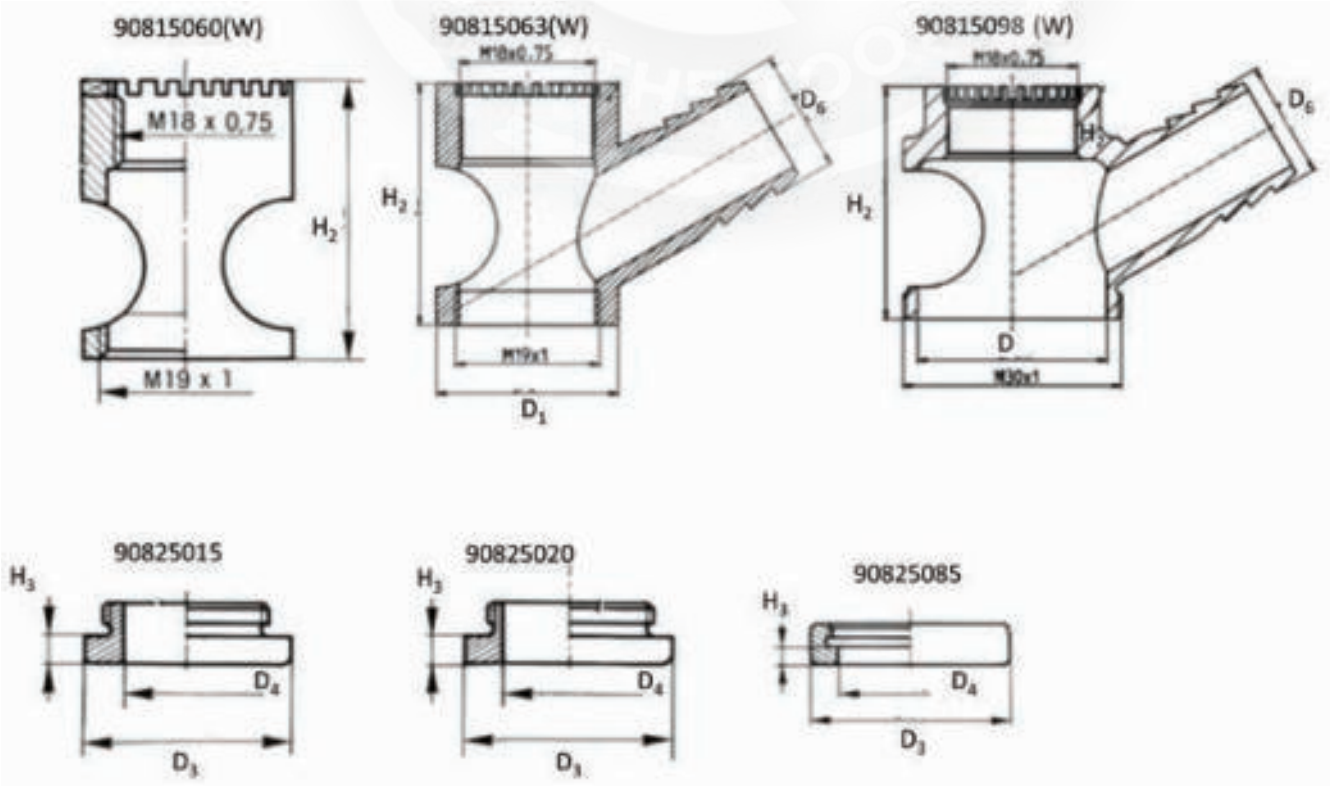

Recoules Quackenbush®
Precision Drilling-Every Time

ADVANTAGES

- Different mounting bases available.
- Reduced dimensions for tight access areas.
- For special composites ➔ mounting base with vacuum.

PRECISION MANUFACTURING

- High precision microstop cage, body in heat-treated chrome steel, fully ground throughout. This ball-mounted microstop cage includes two needle bearings for best utilization.
- When using the RB 257, any misalignment of the microstop cage is corrected by the unique ball-pivoting spindle. This assembly ensures perpendicularity throughout the operation at all time.
- Centering cone of the cutter (120°) for perfect concentricity.
- Microstop depth adjustment (1 scale division = 0.001 in).
- Microstop depth setting is held securely in place by locknut with seal. This patented feature allows an easy loosening of the locknut without damage to the drill cage.

(Pictures are for illustration purposes only)

RB 257		MICROSTOP CAGE ASSEMBLY CODE													
		10015010W	10015010	10015015W	10015015	RC-10015020W	RC-10015020	10015200W	10015200	10015001W	10015001	10015016W	10015016	10015021W	10015021
Basic Drill Cage		●	●	●	●	●	●	●	●	●	●	●	●	●	●
Threaded + tapped base Large Window	90815075W	●		●		●									
Threaded + tapped base	90815075		●		●		●								
Threaded Mounting Base Large Window w/ Vacuum	90815078W									●		●		●	
Threaded Mounting Base Large Window w/ Vacuum	90815078										●		●		●
Offset Mounting Base Large Window + 3 nylon pins	90815084W							●							
Offset Mounting Base + 3 nylon pins	90815084								●						
Hard Chrome Steel Nose	90825015			●	●							●	●		
Nylon Nose Piece	90825020					●	●							●	●
Celeron Rotary Nose	90825210	●	●							●	●				

Recoules Quackenbush®
Precision Drilling-Every Time

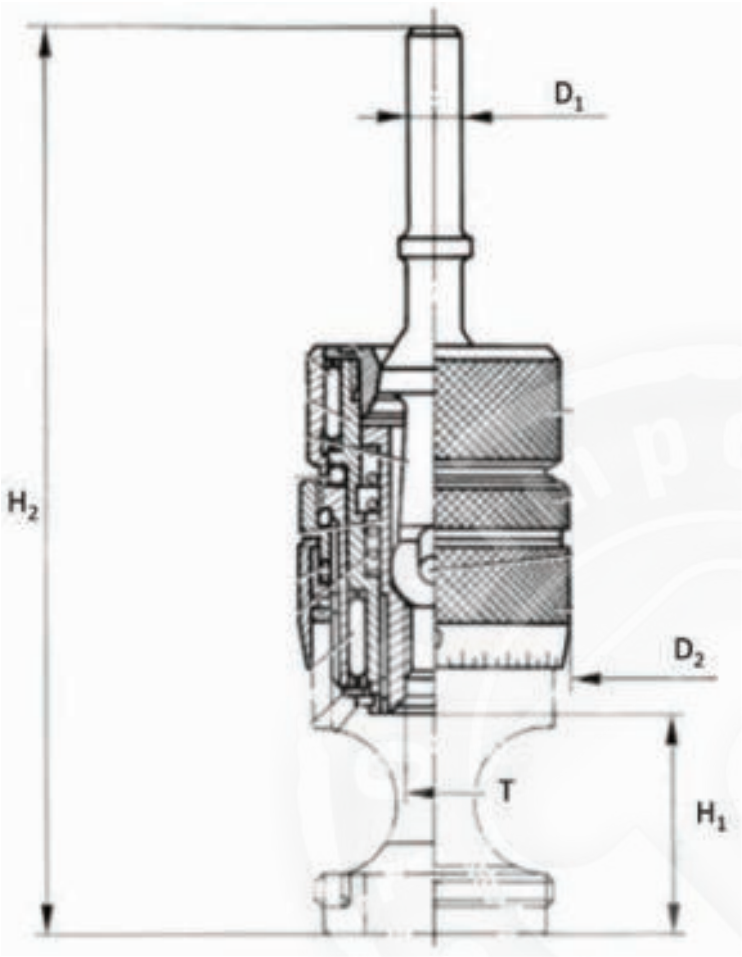

MICROSTOP CAGE									
					H1		H2		Stroke
	T		D1	D2	Min	Max	Min	Max	
RB 257	M6 x 1	mm	6	29	19	24	88	92	6
		in	0.24	1.14	0.75	0.94	3.46	3.62	0.24

MOUNTING BASE								
		D1	D2	L1	L2	H2	R1	D6
90815075(W)	mm	NA	NA	NA	NA	31	NA	NA
	in	NA	NA	NA	NA	1.22	NA	NA
90815084(W)	mm	27	18	17.5	21	32	8	NA
	in	1.06	0.71	0.69	0.83	1.26	0.31	NA
90815078(W)	mm	NA	NA	NA	NA	31	NA	16
	in	NA	NA	NA	NA	1.22	NA	0.63

NOSE PIECE					
		D3	D4	H3	D7
90825210	mm	29	17	3	21.5
	in	1.14	0.67	0.12	0.85
90825015	mm	24	15	3	NA
90825010	in	0.94	0.59	0.12	NA
93045015	mm	5	NA	2	NA
	in	0.20	NA	0.08	NA

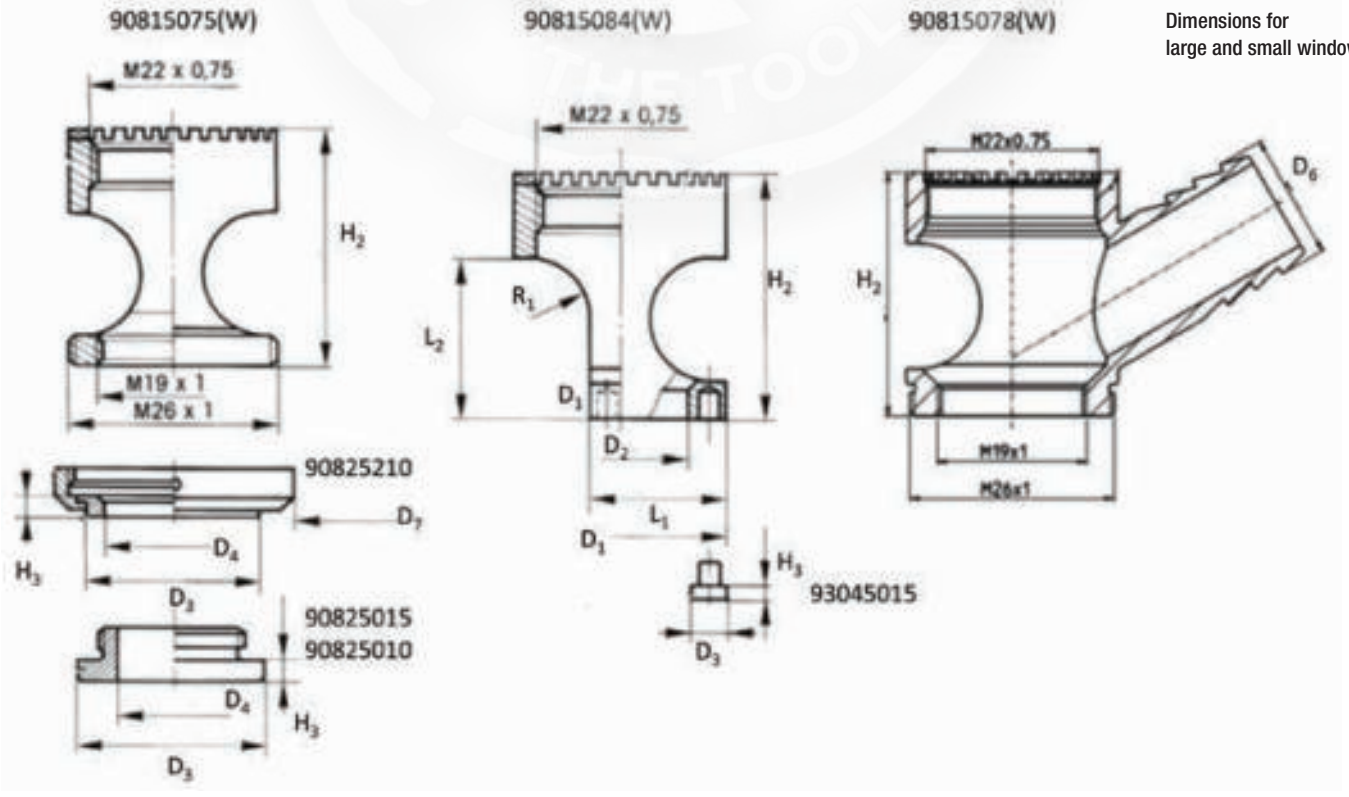

Dimensions for large and small window

Recoules Quackenbush®
Precision Drilling-Every Time

ADVANTAGES

- Different mounting bases available.
- Reduced dimensions for tight access areas.
- High precision microstop cage, body in heat-treated chrome steel, fully ground throughout. This ball-mounted microstop cage includes two needle bearings for best utilization.

PRECISION MANUFACTURING

- When using the RB 258, any misalignment of the microstop cage is corrected by the unique ball-pivoting spindle. This assembly ensures perpendicularity throughout the operation at all time.
- Centering cone of the cutter (120°) for perfect concentricity.
- Microstop depth adjustment (1 scale division = 0.001 in).
- Microstop depth setting is held securely in place by locknut with seal. This patented feature allows an easy loosening of the locknut without damage to the drill cage.

Basic Drill Cage

Mounting Base
90815077W

Mounting Base
90815077

(Pictures are for illustration purposes only)

Nose Piece

RB 258		MICROSTOP CAGE ASSEMBLY CODE	
		10015500PT	10015500W
RBI 258		10015550	10015550W
Basic Drill Cage		●	●
Mounting Base Large Window	90815077 W		●
Mounting Base	90815077	●	
Nose Piece	90825035	●	●

Recoules Quackenbush®
Precision Drilling-Every Time

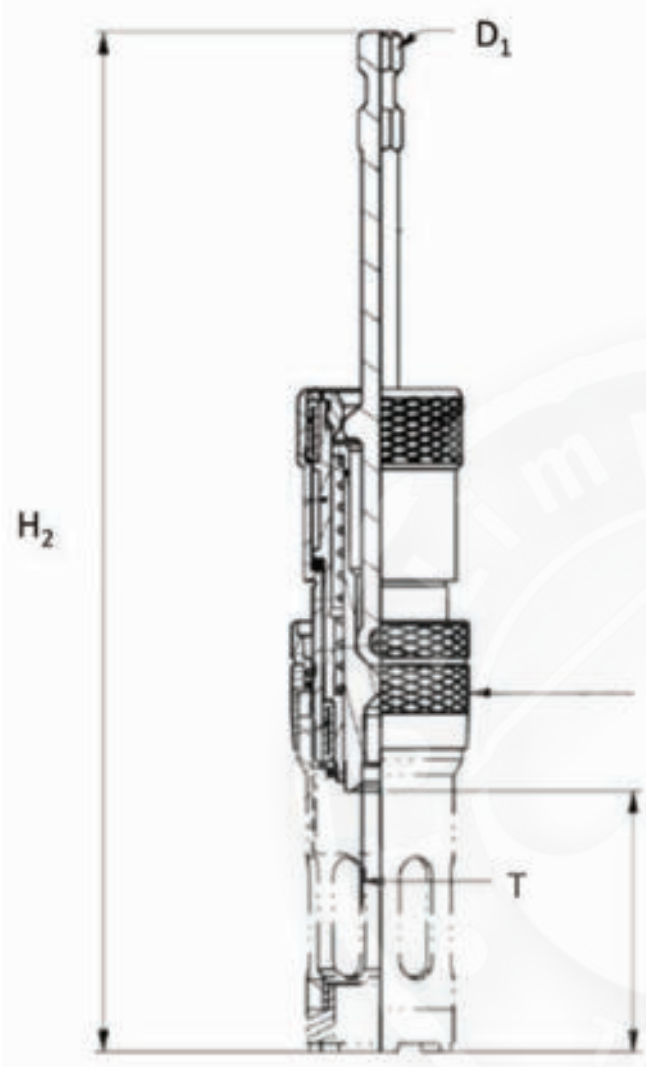

MICROSTOP CAGE									
					H1		H2		Stroke
	T		D1	D2	Min	Max	Min	Max	
RB 258	M6 x 1	mm	6.35	29	41	56	141	156	27
RBI 258	1/4 in - 28	in	0.25	1.14	1.61	2.20	5.55	6.14	1.06

MOUNTING BASE								
		D1	D2	L1	L2	H2	R1	D6
90815077(W)	mm	24	NA	NA	NA	49	NA	NA
	in	0.94	NA	NA	NA	1.93	NA	NA

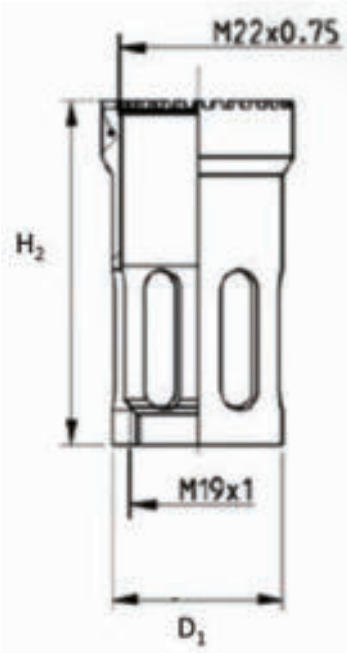

NOSE PIECE					
		D3	D4	H3	D7
90825935	mm	24	15	7	NA
	in	0.94	0.59	0.28	NA

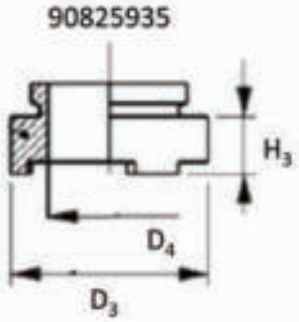

Recoules Quackenbush®
Precision Drilling-Every Time

ADVANTAGES

- Different mounting bases available.
- This cage has been designed for use with cutters greater than 0.394 in dia.
- For special composites ➔ mounting base with vacuum.

PRECISION MANUFACTURING

- Cemented, hardened, and ground chrome-nickel steel spindle mounted on a self-lubricating bronze body and a thrust bearing.
- Centering cone of the cutter (120°) for perfect concentricity.
- Microstop depth adjustment (1 scale division = 0.001 in).
- Microstop depth setting is held securely in place by locknut with seal. This patented feature allows an easy loosening of the locknut without damage to the drill cage.

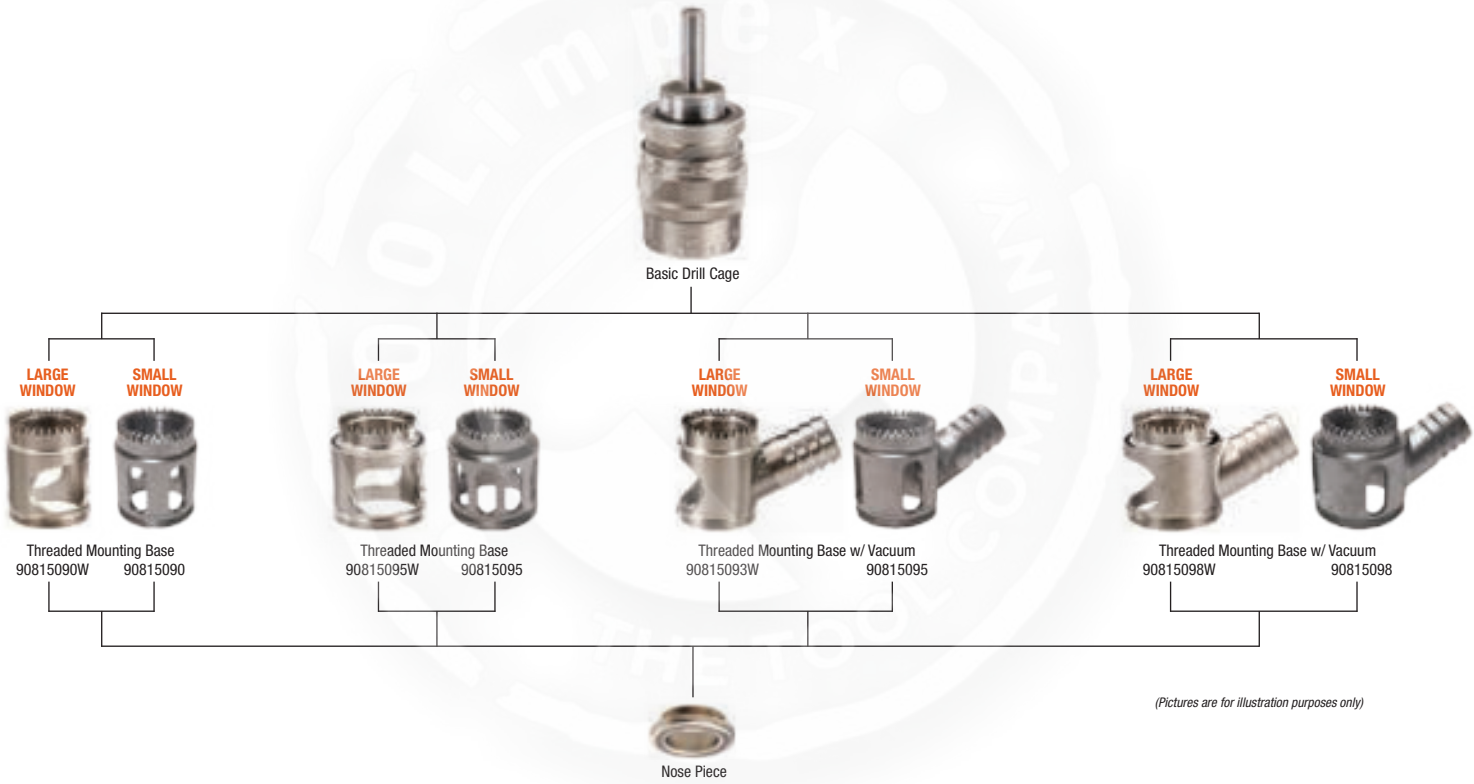

(Pictures are for illustration purposes only)

RB 306 - LARGE		MICROSTOP CAGE ASSEMBLY CODE: LARGE WINDOW								
		RC-10025010W	RC-10025015W	10025105W	10025110W	10025001W	10025016W	10025111W	10025116W	10025117W
Basic Drill Cage		●	●	●	●	●	●	●	●	●
Threaded Mounting Base Large Window	90815090W	●	●							
Threaded Mounting Base Large Window w/ Vacuum	90815093W					●	●			
Threaded Mounting Base Large Window	90815095W			●	●					
Threaded Mounting Base Large Window w/ Vacuum	90815098W							●	●	●
Hard Chrome Steel Nose	90825050	●				●				
Nylon Nose Piece	90825055		●				●			
Hard Chrome Steel Nose	90825080			●						●
Nylon Nose Piece	90825085				●			●		
Rotary Nose Piece	90825090								●	

Recoules Quackenbush®
Precision Drilling-Every Time

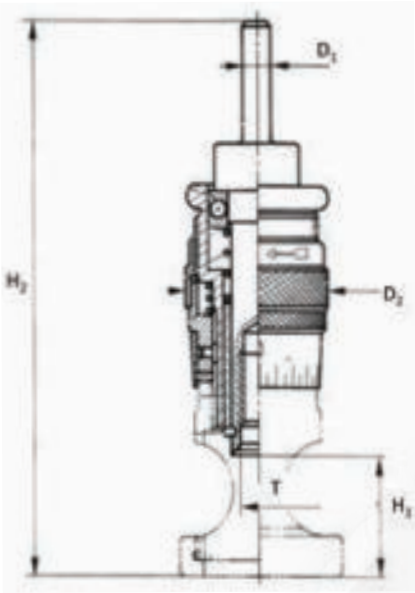

MICROSTOP CAGE									
					H1		H2		Stroke
	T		D1	D2	Min	Max	Min	Max	
RB 306	M6 x 1	mm	6	28	19	26	91	98	7.5
		in	0.24	1.10	0.75	1.02	3.58	3.86	0.30

MOUNTING BASE								
		D1	D2	L1	L2	H2	R1	D6
90815090(W)	mm	NA	NA	NA	NA	32	NA	NA
	in	NA	NA	NA	NA	1.26	NA	NA
90815095(W)	mm	NA	NA	NA	NA	32	NA	NA
	in	NA	NA	NA	NA	1.26	NA	NA
90815093(W)	mm	NA	22	NA	NA	32	NA	16
	in	NA	0.87	NA	NA	1.26	NA	0.63
90815098(W)	mm	NA	26	NA	NA	32	NA	16
	in	NA	1.02	NA	NA	1.26	NA	0.63

Dimensions for large and small window

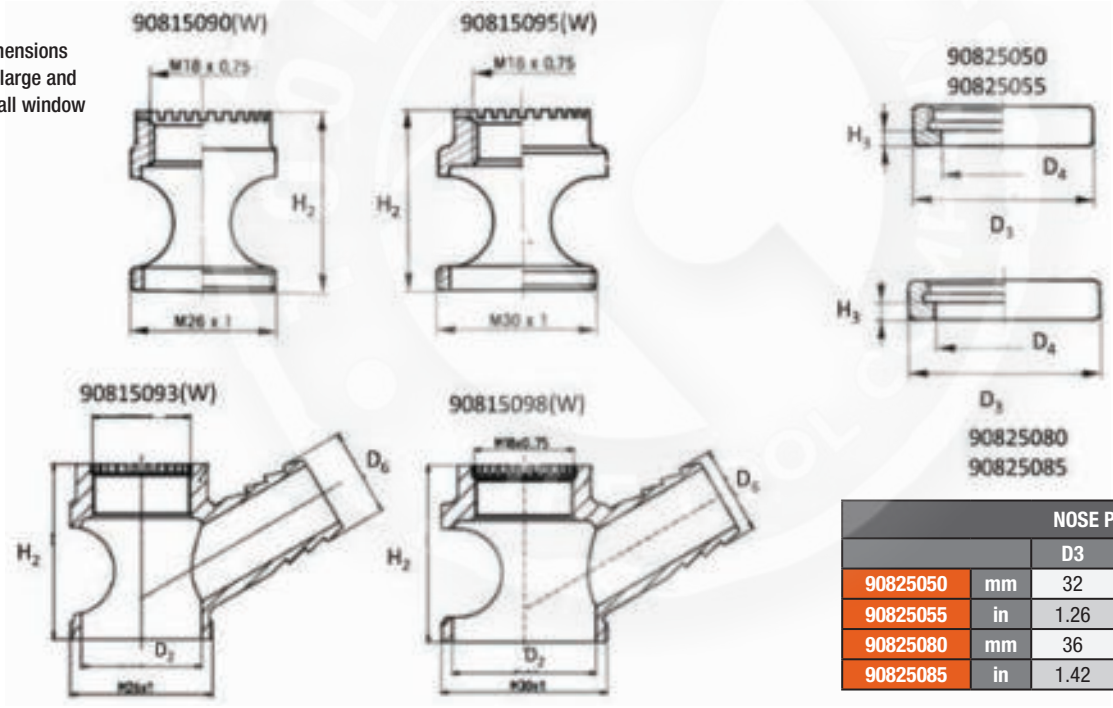

NOSE PIECE					
		D3	D4	H3	D7
90825050	mm	32	22	3	NA
90825055	in	1.26	0.87	0.12	NA
90825080	mm	36	26	3	NA
90825085	in	1.42	1.02	0.12	NA

RB 306 - SMALL		MICROSTOP CAGE ASSEMBLY CODE: SMALL WINDOW								
		RC-10025010	RC-10025015	10025105	10025110	10025001	10025016	10025111	10025116	10025117
Basic Drill Cage		●	●	●	●	●	●	●	●	●
Threaded Mounting Base	90815090	●	●							
Threaded Mounting Base w/ Vacuum	90815093					●	●			
Threaded Mounting Base	90815095			●	●					
Threaded Mounting Base w/ Vacuum	90815098							●	●	●
Hard Chrome Steel Nose	90825050	●				●				
Nylon Nose Piece	90825055		●				●			
Hard Chrome Steel Nose	90825080			●						●
Nylon Nose Piece	90825085				●			●		
Rotary Nose Piece	90825090								●	

Recoules Quackenbush®
Precision Drilling-Every Time

ADVANTAGES

- Different mounting bases available.
- Reduced dimensions for tight access areas.
- For special composites ➔ mounting base with vacuum.

PRECISION MANUFACTURING

- High precision microstop cage, body in heat-treated chrome steel, fully ground throughout. This ball-mounted microstop cage includes two needle bearings for best utilization.
- When using the RB 307, any misalignment of the microstop cage is corrected by the unique ball-pivoting spindle. This assembly ensures perpendicularity throughout the operation at all time.
- Centering cone of the cutter (120°) for perfect concentricity.
- Microstop depth adjustment (1 scale division = 0.001 in).
- Microstop depth setting is held securely in place by locknut with seal. This patented feature allows an easy loosening of the locknut without damage to the drill cage.

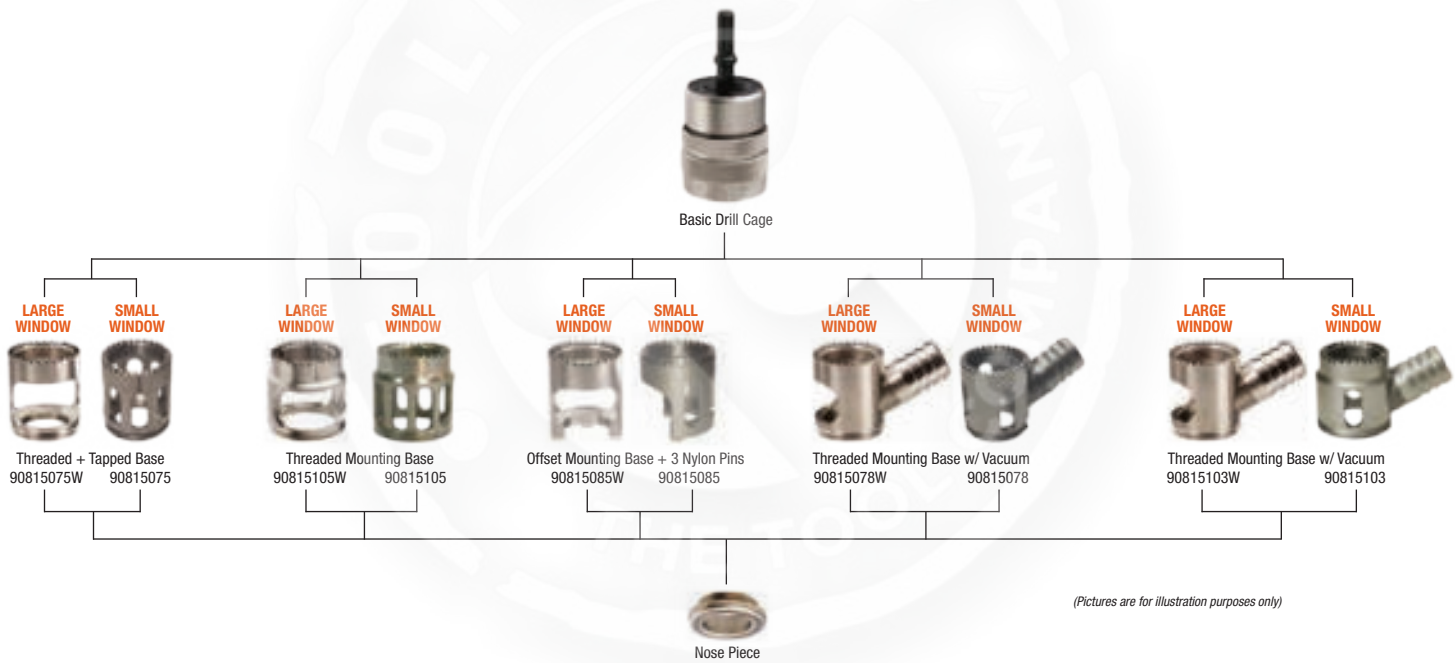

(Pictures are for illustration purposes only)

RB 307 - LARGE		MICROSTOP CAGE ASSEMBLY CODE: LARGE WINDOW												
		10020010W	10020015W	10020020W	10020105W	10020110W	10020115W	10020200W	10020016W	10020001W	10020021W	10020106W	10020111W	10020116W
RBI 307 - LARGE		10020060W	10020065W	10020070W	10020155W	10020160W	10020165W	10020250W						10020166W
Basic Drill Cage		●	●	●	●	●	●	●	●	●	●	●	●	●
Threaded + tapped base Large Window	90815075W	●	●	●										
Threaded Mounting Base Large Window w/ Vacuum	90815078W								●	●	●			
Offset Mounting Base Large Window + 3 nylon pins	90815085W							●						
Threaded Mounting Base Large Window w/ Vacuum	90815103W											●	●	●
Threaded Mounting Base Large Window	90815105W				●	●	●							
Nose Piece - Rotary Assembly	90825210	●								●				
Hard Chrome Steel Nose	90825015		●						●					
Nylon Nose Piece	90825020			●							●			
Celeron Rotary Nose	90825205				●							●		
Hard Chrome Steel Nose	90825080					●							●	
Nylon Nose Piece	90825085						●							●

Recoules Quackenbush®
Precision Drilling-Every Time

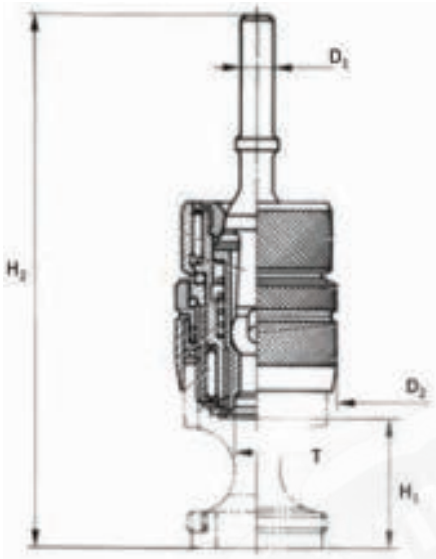

MICROSTOP CAGE									
					H1		H2		Stroke
	T		D1	D2	Min	Max	Min	Max	
RB 307	M8 x 1	mm	6	29	19	24	88	92	7.5
RBI 307	1/4 in - 28	in	0.24	1.14	0.75	0.94	3.46	3.62	0.30

MOUNTING BASE								
		D1	D2	L1	L2	H2	R1	D6
90815075(W)	mm	NA	NA	NA	NA	31	NA	NA
	in	NA	NA	NA	NA	1.22	NA	NA
90815105(W)	mm	NA	NA	NA	NA	31	NA	NA
	in	NA	NA	NA	NA	1.22	NA	NA
90815085(W)	mm	27	18	17.5	21	32	5	3
	in	1.06	0.71	0.69	0.83	1.26	0.20	0.12
90815078(W)	mm	NA	NA	NA	NA	31	NA	16
	in	NA	NA	NA	NA	1.22	NA	0.63
90815103(W)	mm	NA	24.5	NA	NA	30.5	NA	16
	in	NA	0.96	NA	NA	1.20	NA	0.63

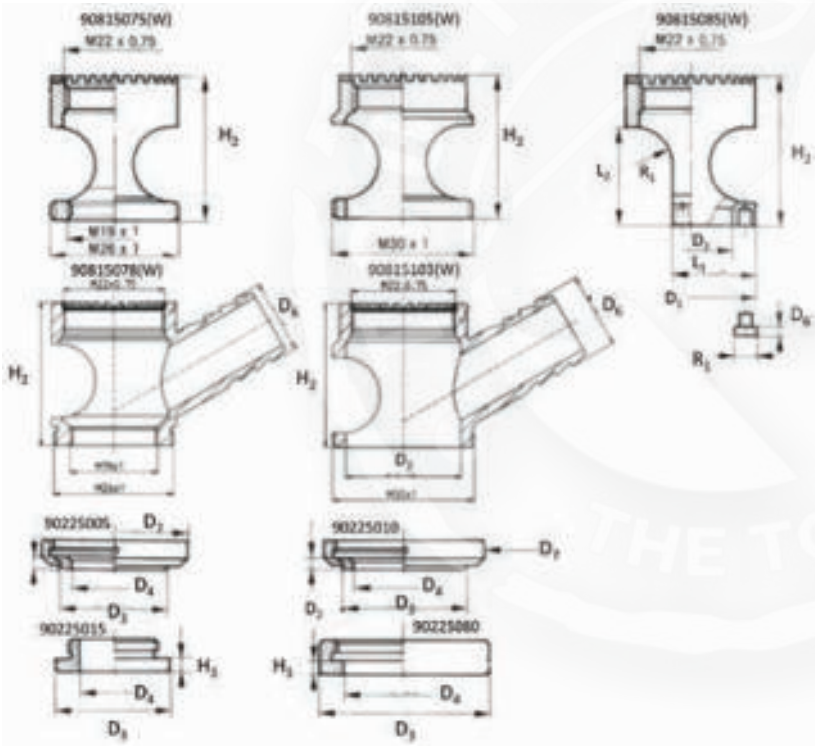

Dimensions for
large and small window

NOSE PIECE					
		D3	D4	H3	D7
90225005	mm	21.5	17	3	29
	in	0.85	0.67	0.12	1.14
90225010	mm	26	23	3	34
	in	1.02	0.91	0.12	1.34
90225015	mm	24	15	3	NA
	in	0.94	0.59	0.12	NA
90225080	mm	36	26	3	NA
	in	1.42	1.02	0.12	NA

RB 307 - SMALL		MICROSTOP CAGE ASSEMBLY CODE: SMALL WINDOW												
		10020010	10020015	10020020PT	10020105	10020110	10020115	10020200	10020016	10020001	10020021	10020106	10020111	10020116
RBI 307 - SMALL		10020060	10020065	10020070	10020155	10020160	10020165	10020250						10020166
Basic Drill Cage		●	●	●	●	●	●	●	●	●	●	●	●	●
Threaded + tapped base	90815075	●	●	●										
Threaded Mounting Base w/ Vacuum	90815078								●	●	●			
Offset Mounting Base + 3 nylon pins	90815085							●						
Threaded Mounting Base w/ Vacuum	90815103											●	●	●
Threaded Mounting Base	90815105				●	●	●							
Celeron Rotary Nose	90825210	●								●				
Hard Chrome Steel Nose	90825015		●						●					
Nylon Nose Piece	90825020			●							●			
Celeron Rotary Nose	90825205				●									
Hard Chrome Steel Nose	90825080					●							●	
Nylon Nose Piece	90825085						●							●

Recoules Quackenbush®
Precision Drilling-Every Time

PRECISION MANUFACTURING

- Detachable spindle adapter provides alternative methods for use:
  - In combination with 3 jaw chuck.
  - Mounting direct onto machine spindle. This method provides increased level of concentricity, while reducing the length and weight of the drill/tool assembly. This results in better performance. improved machining and less fatigue on the operator.
- Cemented, hardened, and ground chrome-nickel steel spindle mounted on 3-needle-bearings and a thrust bearing.
- Microstop depth adjustment (1 scale division = 0.001 in).
- Microstop depth setting is held securely in place by locknut with seal. This patented feature allows an easy loosening of the locknut without damage to the drill cage.

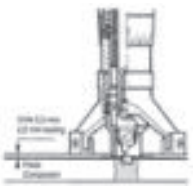

DRILLING + COUNTERSINKING APPLICATION

- The mounting base is commonly used with strip templates. The tripod ensures maximum stability. Can be used with Cutter type RB 018 - see page 88.

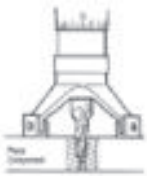

REAMING + COUNTERSINKING APPLICATION

- In this example, the tripod is used with cutter RB 022 - see page 91. (Positioning of the cutter with pilot into the pilot hole).

(Pictures are for illustration purposes only)

RB 356 HP 21 - LARGE		MICROSTOP CAGE ASSEMBLY CODE: LARGE WINDOW*					
		10040000PT	10040200W	10040210W	10040405W	10040505W	10040600W
RB 356 HPI 21 - LARGE		10040050	10040250W	10040260W	10040455W	10040555W	10040650W
RB 356 HPI 21 (Thread 3/8 - 24F)		10040700PT	10040720W	10040730W	10040740W	10040750W	10040760W
Basic Drill Cage + Adapter	RB 356 HP 21 RB 356 HPI 21	●	●	●	●	●	●
Mounting Base Flat Bearing Large Window	90815125W		●	●			
Threaded Mounting Base Large Window	90815135W				●		
Tripod + 3 nylon studs	90815165W			●		●	
Mounting Base Flat Bearing Large Window	90815070W						●
Nylon Nose Piece	90825175				●		

*Add CJ or CJW to the reference for Jacobs cone adapter.

Recoules Quackenbush®
Precision Drilling-Every Time

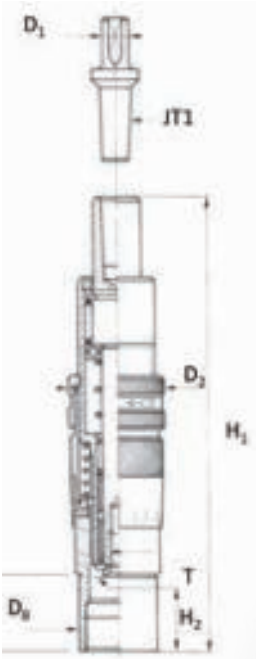

MICROSTOP CAGE										
					H1		H2		Stroke	D8
	T		D1	D2	Min	Max	Min	Max		
RB 356 HP 21	M6 x 1	mm	7	27	4	24	116	136	21	22
RB 356 HPI 21	1/4 in - 28	in	0.28	1.06	0.16	0.94	4.57	5.35	0.83	0.87

MOUNTING BASE								
		D1	D2	L1	L2	H2	R1	D6
90815125(W)	mm	14.5	12.5	22	NA	26	NA	NA
	in	0.57	0.49	0.87	NA	1.02	NA	NA
90815135(W)	mm	NA	NA	21	NA	27	NA	NA
	in	NA	NA	0.83	NA	1.06	NA	NA
90815070(W)	mm	24	19	24	NA	30	NA	NA
	in	0.94	0.75	0.94	NA	1.18	NA	NA
90815165(W)	mm	64	51	6.5	2	42	NA	22
	in	2.52	2.01	0.26	NA	1.65	NA	0.87

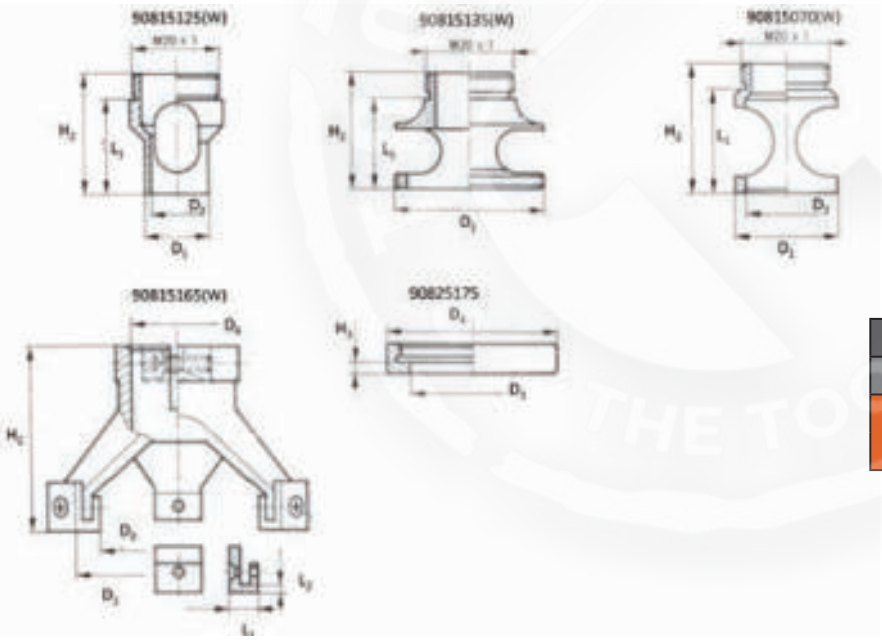

Dimensions for
large and small window

NOSE PIECE					
		D3	D4	H3	D7
90825175	mm	29	40	3	NA
	in	1.14	1.57	0.12	NA

RB 356 HP 21 - SMALL		MICROSTOP CAGE ASSEMBLY CODE: SMALL WINDOW*					
		10040000PT	10040200PT	10040210	10040405	10040505	10040600PT
RB 356 HPI 21 - SMALL		10040050	10040250	10040260	10040455	10040555	10040650
RB 356 HPI 21 (Thread 3/8 - 24F)		10040700PT	10040720	10040730	10040740	10040750	10040760
Basic Drill Cage + Adapter	RB 356 HP 21 RB 356 HPI 21	●	●	●	●	●	●
Mounting Base Flat Bearing	90815125		●	●			
Threaded Mounting Base	90815135				●		
Tripod + 3 Nylon studs	90815165			●		●	
Mounting Base Flat Bearing	90815070						●
Nylon Nose Piece	90825175				●		

*Add CJ or CJW to the reference for Jacobs cone adapter.

Recoules Quackenbush®
Precision Drilling-Every Time

PRECISION MANUFACTURING

- Detachable spindle adapter provides alternative methods for use:
  - In combination with 3 jaw chuck.
  - Mounting direct onto machine spindle. This method provides increased level of concentricity, while reducing the length and weight of the drill/tool assembly. This results in better performance. improved machining and less fatigue on the operator.
- Cemented, hardened, and ground chrome-nickel steel spindle mounted on 3-needle-bearings and a thrust bearing.
- Microstop depth adjustment (1 scale division = 0.001 in).
- Microstop depth setting is held securely in place by locknut with seal. This patented feature allows an easy loosening of the locknut without damage to the drill cage.

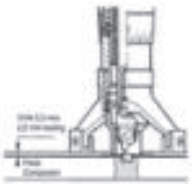

DRILLING + COUNTERSINKING APPLICATION

- The mounting base is commonly used with strip templates. The tripod ensures maximum stability. Can be used with Cutter type RB 018 - see page 88.

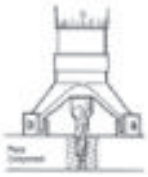

REAMING + COUNTERSINKING APPLICATION

- In this example. the tripod is used with cutter RB 022 - see page 91. (Positioning of the cutter with pilot into the pilot hole).

(Pictures are for illustration purposes only)

RB 356 HP 38 - LARGE		MICROSTOP CAGE ASSEMBLY CODE: LARGE WINDOW*					
		10045000PT	10045200W	10045210W	10045405W	10045505W	10045600W
RB 356 HPI 38 - LARGE		10045050	10045250W	10045260W	10045455W	10045555W	10045650W
RB 356 HPI 38 (Thread 3/8 - 24F)		10045700PT	10045720W	10045730W	10045740W	10045750W	10045760W
Basic Drill Cage + Adapter	RB 356 HP 38 RB 356 HPI 38	●	●	●	●	●	●
Mounting Base Flat Bearing Large Window	90815125W		●	●			
Threaded Mounting Base Large Window	90815135W				●		
Tripod + 3 nylon studs	90815165W			●		●	
Mounting Base Flat Bearing Large Window	90815070W						●
Nylon Nose Piece	90825175				●		

*Add CJ or CJW to the reference for Jacobs cone adapter.

Recoules Quackenbush®
Precision Drilling-Every Time

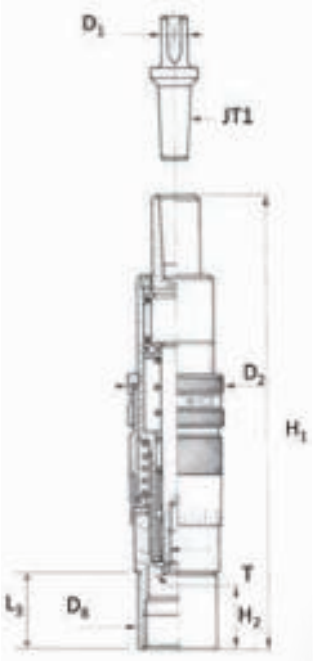

MICROSTOP CAGE											
					H1		H2		Stroke	D8	L3
	T		D1	D2	Min	Max	Min	Max			
RB 356 HP 38	M6 x 1	mm	7	27	22	37	165	183	38	22	22
RB 356 HPI 28	1/4 in - 28	in	0.28	1.06	0.87	1.46	6.50	7.20	1.50	0.87	0.87

MOUNTING BASE								
		D1	D2	L1	L2	H2	R1	D6
90815125(W)	mm	14.5	12.5	22	NA	26	NA	NA
	in	0.57	0.49	0.87	NA	1.02	NA	NA
90815135(W)	mm	NA	NA	21	NA	27	NA	NA
	in	NA	NA	0.83	NA	1.06	NA	NA
90815070(W)	mm	24	19	24	NA	30	NA	NA
	in	0.94	0.75	0.94	NA	1.18	NA	NA
90815165(W)	mm	64	51	6.5	2	42	NA	22
	in	2.52	2.01	0.26	NA	1.65	NA	0.87

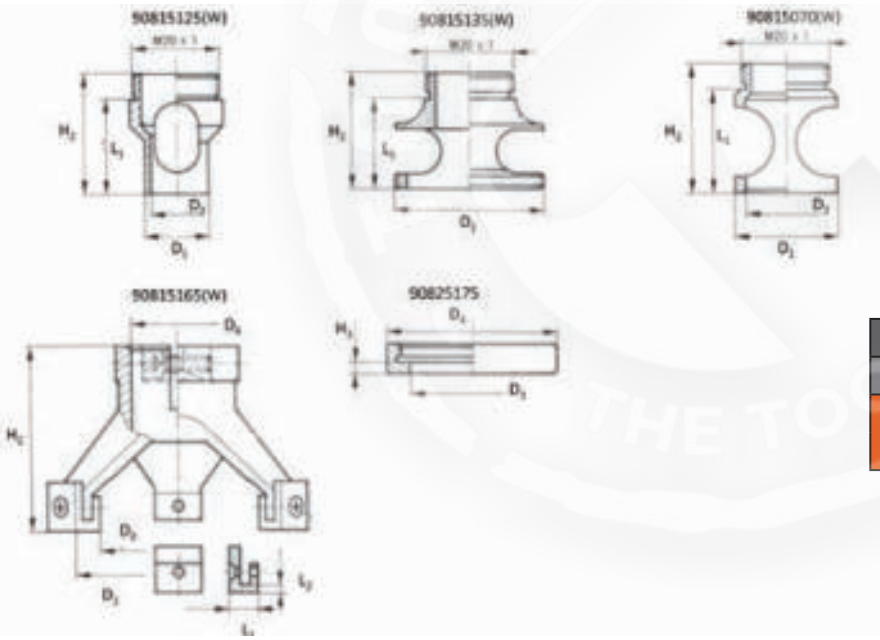

Dimensions for
large and small window

NOSE PIECE					
		D3	D4	H3	D7
90825175	mm	29	40	3	NA
	in	1.14	1.57	0.12	NA

RB 356 HP 38 - SMALL		MICROSTOP CAGE ASSEMBLY CODE: SMALL WINDOW*					
		10045000PT	10045200PT	10045210	10045405	10045505	10045600PT
RB 356 HPI 38 - SMALL		10045050	10045250	10045260	10045455	10045555	10045650
RB 356 HPI 38 (Thread 3/8 - 24F)		10045700PT	10045720	10045730	10045740	10045750	10045760
Basic Drill Cage + Adapter	RB 356 HP 38 RB 356 HPI 38	●	●	●	●	●	●
Mounting Base Flat Bearing	90815125		●	●			
Threaded Mounting Base	90815135				●		
Tripod + 3 Nylon studs	90815165			●		●	
Mounting Base Flat Bearing	90815070						●
Nylon Nose Piece	90825175				●		

*Add CJ or CJW to the reference for Jacobs cone adapter.

Recoules Quackenbush®
Precision Drilling-Every Time

ADVANTAGES

- Special for drill countersinking reamers and taper-lok cutters:
- - RB 356 HPI 58 for use with taper-lok cutters
- - RB 356 HP 58 for use with cutters RB 022

PRECISION MANUFACTURING

- Detachable spindle adapter provides alternative methods for use:
  - In combination with 3 jaw chuck.
  - Mounting direct onto machine spindle. This method provides increased level of concentricity, while reducing the length and weight of the drill / tool assembly. This results in better performance, improved machining, and less fatigue on the operator.
- Cemented, hardened, and ground chrome-nickel steel spindle mounted on 3 needle-bearings and a thrust bearing.
- Microstop depth adjustment (1 scale division = 0.001 in).
- Microstop depth setting is held securely in place by locknut with seal. This patented feature allows an easy loosening of the locknut without damage to the drill cage.

Basic Drill Cage + Adapter
RB 356 HP 58 / RB 356 HPI 58

Mounting Base Flat Bearing
90815140W

Mounting Base Flat Bearing
90815140

(Pictures are for illustration purposes only)

RB 356 HP 58		MICROSTOP CAGE ASSEMBLY CODE*	
		10050000W	10050000
RB 356 HPI 58		10050050W	10050050
Basic Drill Cage + Adapter		●	●
Mounting Base Large Window	90815140W	●	
Mounting Base Flat Bearing	90815140		●

*Add CJ or CJW to the reference for Jacobs cone adapter.

Recoules Quackenbush®
Precision Drilling-Every Time

MICROSTOP CAGE												
					H1		H2					
	T		D1	D2	Min	Max	Min	Max	Stroke	D3	L3	D4
RB 356 HP 58	M10 x 1	mm	10	36	64	92	264	292	58	30	103	38
RB 356 HPI 58	7/16 in - 20	in	0.39	1.42	2.52	3.62	10.39	11.50	2.28	1.18	4.06	1.50

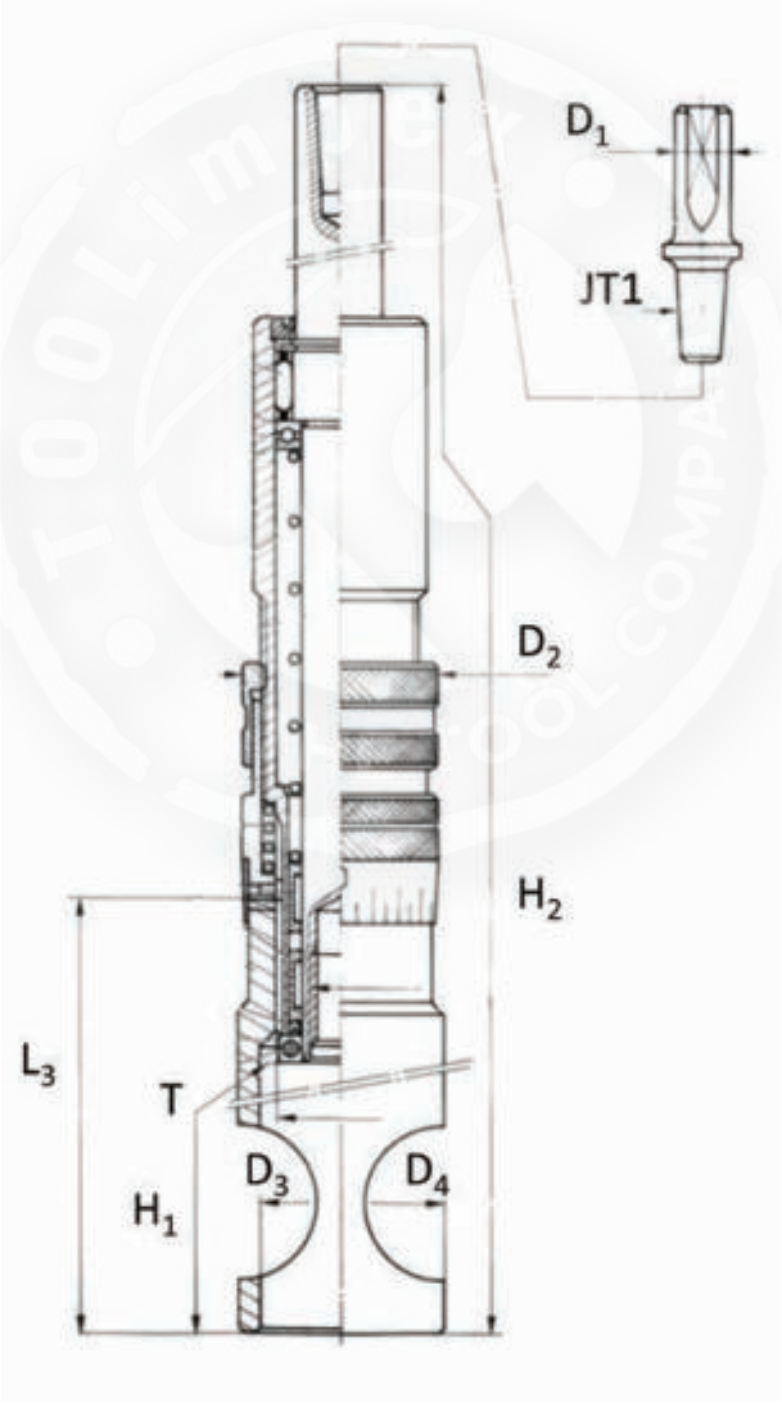

Recoules Quackenbush®
Precision Drilling-Every Time

ADVANTAGES

- This drill cage has been designed for use with cutter of 7/8 in to 1 1/2 in diameter.
- Different mounting bases available.
- Reduced dimensions for tight access areas.

PRECISION MANUFACTURING

- Detachable spindle adapter provides alternative methods for use:

  - In combination with 3 jaw chuck.

  - Mounting direct onto machine spindle. This method provides increased level of concentricity, while reducing the length and weight of the drill/tool assembly. This results in better performance, improved machining, and less fatigue on the operator.
- Cemented, hardened, and ground chrome-nickel steel spindle mounted on 3-needle bearings and a thrust bearing.
- Microstop depth adjustment (1 scale division = 0.001 in).
- Microstop depth setting is held securely in place by locknut with seal. This patented feature allows an easy loosening of the locknut without damage to the drill cage.

Basic Drill Cage + Adapter

(Pictures are for illustration purposes only)

Mounting Base Flat Bearing
90815150W

Mounting Base Flat Bearing
90815155W

Mounting Base Flat Bearing
90815150

Mounting Base Flat Bearing
90815155

RB 406		MICROSTOP CAGE ASSEMBLY CODE*			
		10030010W	10030010PT	100300105W	100300105
Basic Drill Cage + Adapter		●	●	●	●
Mounting Base Flat Bearing Large Window	90815150W	●			
Mounting Base Flat Bearing	90815150		●		
Mounting Base Flat Bearing Large Window	90815155W			●	
Mounting Base Flat Bearing	90815155				●

*Add CJ or CJW to the reference for Jacobs cone adapter.

Recoules Quackenbush®
Precision Drilling-Every Time

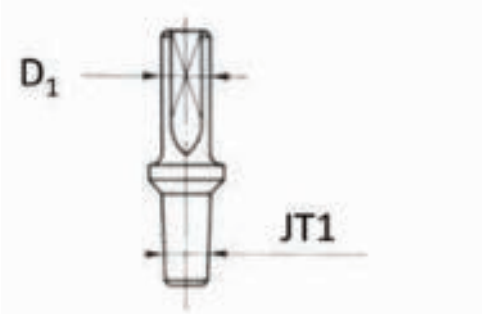

MICROSTOP CAGE									
					H1		H2		Stroke
	T		D1	D2	Min	Max	Min	Max	
RB406	M10 x 1	mm	10	36	26	53	136	163	14
		in	0.39	1.42	1.02	2.09	5.35	6.42	0.55

MOUNTING BASE								
		D1	D2	L1	L2	H2	R1	D6
90815150(W)	mm	30	25	NA	NA	63	NA	NA
	in	1.18	0.98	NA	NA	2.48	NA	NA
90815155(W)	mm	45	40	NA	NA	63	NA	NA
	in	1.77	1.57	NA	NA	2.48	NA	NA

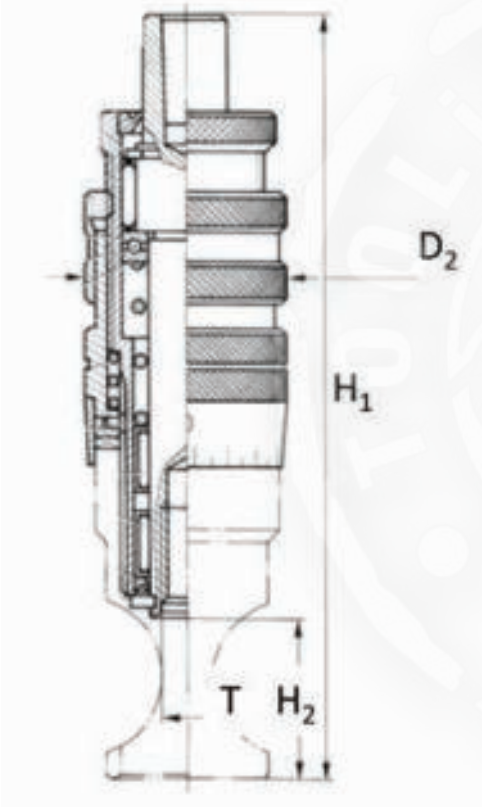

Dimensions for
large and small window

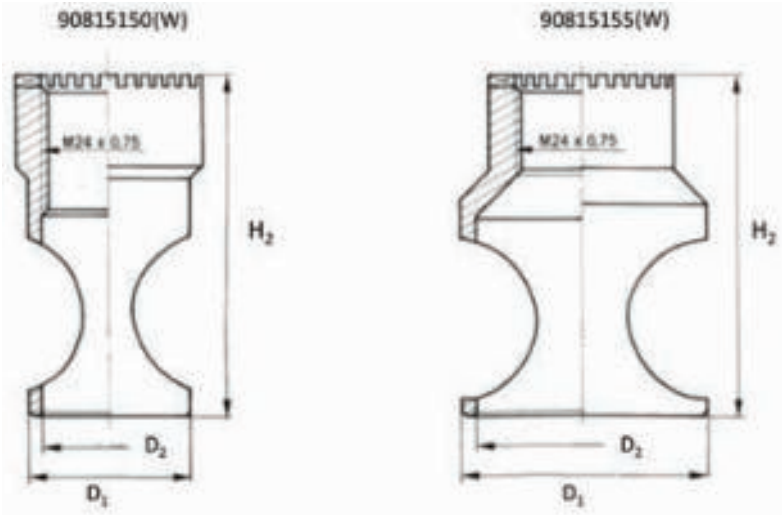

Recoules Quackenbush®
Precision Drilling-Every Time

DESCRIPTION

- The drill-holder should be used in combination with our mounting base 90815120.
- Expands the capability of the strip template, while reducing manufacturing cost.
- Precise concentricity ensures cutter wear is kept to a minimum.

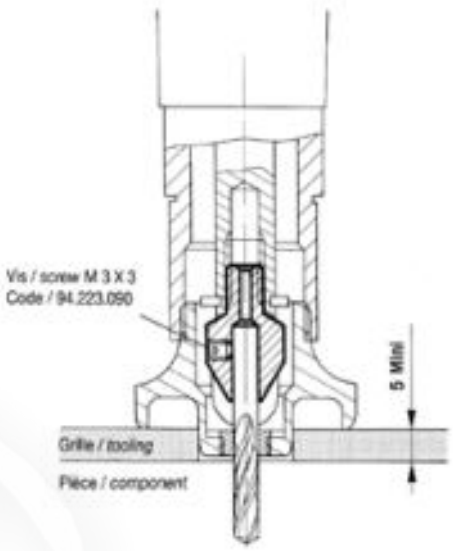

MICROSTOP CAGE	DRILL HOLDER ATTACHMENT	MAXIMUM DRILLING - DIAMETER	BASE CODE NUMBER
RB 356 HP 21	M6 x 1	6.35 - 1/4 in	10120 + Ø
RB 356 HP 38	M6 x 1	6.35 - 1/4 in	10120 + Ø
RB 356 HPI 21	1/4 - 28 F	6.35 - 1/4 in	10130 + Ø
RB 356 HPI 38	1/4 - 28 F	6.35 - 1/4 in	10130 + Ø

EXAMPLE: FOR USE WITH A DRILL OF 3.17 mm DIAMETER

For Drill Holder M6 x 1

Basic Code	+	Drill Size Expressed in 1/100 mm:	Code to Indicate
10120	+	317	: 10120317

For Drill Holder 1/4 - 28F

Basic Code	+	Drill Size Expressed in 1/100 mm:	Code to Indicate
10130	+	317	: 10130317

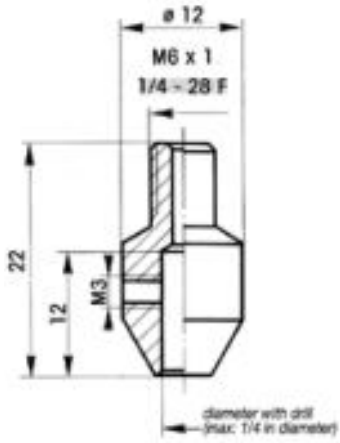

All special drills for use on these drill holders may be supplied on request.

Recoules Quackenbush®
Precision Drilling-Every Time

Cutters w/ Inserted Pilot | Carbide, HSS-E, PCD ---------- 74, 77-81

Cutters w/ Inserted Pilot | HSS-PCD ---------- 75

Cutters w/ Solid Pilot | Carbide PCD ---------- 76

Spotfacing Cutters w/ Pilot Insert | Carbide, HSS-E, PCD ---------- 82

Standard Sizes for Pilots ---------- 83

Back Spotfacing and Countersink Cutters | HSS-E ---------- 84

Standard Sizes for Pilots | Threaded ---------- 85

Back Spotfacing and Countersink Cutters - Bayonet Locking Pilot ---------- 86

Standard Sizes for Pilots | Bayonet Locking ---------- 87

Drill and Countersink Cutters | Carbide, HSS-E, PCD ---------- 88

Drill and Countersink Cutters - Semi/Auto | Carbide, HSS-E, PCD ---------- 89

Drill, Ream, and Countersink Cutters | Carbide, HSS-E, PCD ---------- 90

Drill and Countersink Cutters - Nutplate Drill Motors | Carbide, HSS-E ---------- 92

Router Cutters | Carbide, HSS-E, PCD ---------- 93

Tapered Drill Reamers | Carbide ---------- 94

Fluted Hand Reamers | Carbide, HSS-E ---------- 95

Drills for Flat Offset Angle Drills | HSS ---------- 96

Wire Brush for Rivet Holes ---------- 97

Cutters with Inserted Pilot for Rivets and Screws

Carbide | HSS-E | PCD

Recoules Quackenbush®
Precision Drilling-Every Time

FOR USE WITH	ALUMINIUM	STEEL	TITANIUM	COMPOSITE
Carbide	●	●	●	●
HSS-E	●	●	●	
PCD*				●

Centering cone

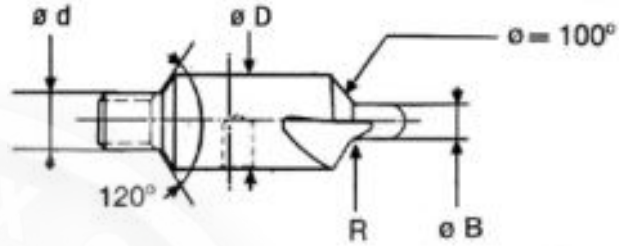

MICROSTOP CAGE REF CHAPTER A	CUTTER Ø D ± 0.1 mm	PILOT Ø B -0.02 mm -0.05 mm	PILOT Ø B -0.0007 in -0.0020 in	RADIUS R mm	NUMBERS OF FLUTES	THREAD Ø d	CUTTER REF. HSS-E	CUTTER REF. CARBIDE
RB156 RB206 RB256 RB257 RB258	10	2.38	0.0937	0.2 - 0.4	3	M6x1	31206000	-
	10	2.50	0.0984	0 - 0.25	3	M6x1	-	02504028PT
	10	3.00	0.1181	0.45 - 0.65	3	M6x1	-	02504029PT
	10	3.162	0.1245	0 - 0.25	3	M6x1	-	02504067PT
	10	3.17	0.1248	0.2 - 0.4	3	M6x1	31206005	-
	10	3.50	0.1378	0.2 - 0.4	3	M6x1	31206010	-
	10	3.60	0.1417	0.2 - 0.4	3	M6x1	31206015	-
	10	3.97	0.1563	0.2 - 0.4	3	M6x1	31206020	-
	10	4.00	0.1575	0.2 - 0.4	3	M6x1	31206025	-
	10	4.00	0.1575	0.45 - 0.65	3	M6x1	-	02504030PT
	10	4.10	0.1614	0.55 - 0.75	3	M6x1	-	02504061PT
	10	4.15	0.1634	0.2 - 0.4	3	M6x1	31206030	-
	10	4.76	0.1874	0.4 - 0.75	3	M6x1	31206035	-
	10	4.80	0.1890	0.4 - 0.75	3	M6x1	31206040	-
	10	4.80	0.1890	0.55 - 0.75	3	M6x1	-	02504064PT
	10	4.95	0.1949	0.55 - 0.75	3	M6x1	-	02504062PT
	10	5.60	0.2205	0.4 - 0.75	3	M6x1	31206045	-
	10	6.22	0.2449	0.4 - 0.75	3	M6x1		02504069PT
RB306 RB307	14	4.76	0.1874	0.4 - 0.75	3	M8x1	31206100	-
	14	5.00	0.1969	0.4 - 0.75	3	M8x1	31206105	-
	14	5.00	0.1969	0.55 - 0.75	3	M8x1	-	02504031PT
	14	5.50	0.2165	0.55 - 0.75	3	M8x1	-	02504032PT
	14	5.60	0.2205	0.4 - 0.75	3	M8x1	31206110	-
	14	6.00	0.2362	0.4 - 0.75	3	M8x1	31206120	-
	14	6.00	0.2362	0.55 - 0.75	3	M8x1		02504033PT
	14	6.35	0.2500	0.4 - 0.75	3	M8x1	31206125	-
	14	6.50	0.2559	0.55 - 0.75	3	M8x1	-	02504034PT
	17	8.00	0.3150	0.75 - 1.25	3	M8x1	31206200	
	21	8.00	0.3150	0.8 - 1.00	3	M8x1	-	02504035PT
	21	8.50	0.3346	0.8 - 1.00	3	M8x1	-	02504036PT
	21	9.52	0.3748	0.75 - 1.25	3	M8x1	31206300	-
	21	10.00	0.3937	0.75 - 1.25	3	M8x1	31206305	-
RB406 RB356HP58	25.4	10.00	0.3937	0.8 - 1.00	3	M10x1	-	02504037PT
	25.4	12.00	0.4724	1 - 1.25	3	M10x1	-	02504038PT

EXPERT ADVICE

- In some cases, microstop cages are impractical or too bulky to be used. We then recommend to use drilling adapters, pg. 43.

*Alternative cutters can be made on request with special diameters, special thread (ex: 1/4-28F. M10x1….), special angles (ex: 90°. 120°....), carbide, HSS-E or PCD**
** Only to use only with pilots having a head dia ≥ shank dia + 0.5 mm (0.0196 in).*

Recoules Quackenbush®
Precision Drilling - Every Time

FOR USE WITH	ALUMINIUM	STEEL	TITANIUM	COMPOSITE
HSS-PCD				●

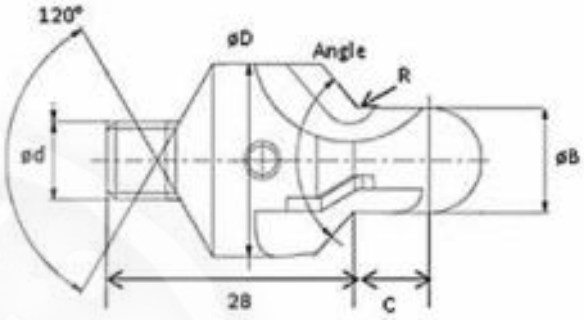

MICROSTOP CAGE REF CHAPTER A	CUTTER Ø D ± 0.1 mm	PILOT Ø B -0.02 mm -0.05 mm	PILOT Ø B -0.0007 in -0.0020 in	RADIUS R mm	NUMBERS OF FLUTES	ANGLE	THREAD Ø D	PILOT Ø C	CUTTER REF. HSS-PCD
RB156 RB206 RB256 RB257 RB258	10	2.5	0.0984	0.2 / 0.4	2	100°	M6x100	2.4	02084019PT
	10	3	0.1181	0.2 / 0.4	2	100°	M6x100	3.1	02084021PT
	10	3.2	0.1260	0.2 / 0.4	2	100°	M6x100	3.1	02084020PT
	10	3.5	0.1378	0.2 / 0.4	2	100°	M6x100	3.7	02084022PT
	10	4	0.1575	0.2 / 0.4	2	100°	M6x100	4	02084023PT
	10	4.8	0.1890	0.4 / 0.75	2	100°	M6x100	4.7	02084032PT
	10	5	0.1969	0.4 / 0.75	2	100°	M6x100	4.7	02084026PT
RB306 RB307	14	3.89	0.1531	0.64 / 0.84	2	100°	M8x100	5.06	02084035PT
	14	4.15	0.1634	0.64 / 0.84	2	100°	M8x100	4.93	02084030PT
	14	4.81	0.1894	0.75 / 0.95	2	100°	M8x100	4.6	02084031PT
	14	5.04	0.1984	0.75 / 0.95	2	100°	M8x100	4.48	02084029PT
	14	6	0.2362	0.4 / 0.75	2	120°	M8x100	5	02084208PT
	14	6.6	0.2598	0.75 / 1.25	2	100°	M8x100	5	02084027PT

EXPERT ADVICE

- In some cases, microstop cages are impractical or too bulky to be used. We then recommend to use drilling adapters, pg. 43

*Alternative cutters can be made on request with special diameters, special thread (ex: 1/4-28F. M10x1….), special angles (ex : 90°. 120°....), carbide. HSS-E or PCD**
** Only to use only with pilots having a head dia ≥ shank dia + 0.5 mm (0.0196 in).*

Recoules Quackenbush
Precision Drilling-Every Time

FOR USE WITH	ALUMINIUM	STEEL	TITANIUM	COMPOSITE
Carbide PCD				●

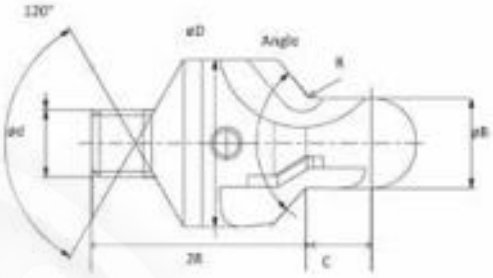

MICROSTOP CAGE REF CHAPTER A	CUTTER Ø D ±0.1 mm	PILOT ØB -0.02 mm -0.05 mm	PILOT ØB -0.0007 in -0.0020 in	RADIUS R mm	NUMBERS OF FLUTES	ANGLE	THREAD Ø D	PILOT Ø C	REF. CUTTER CARBIDE PCD
RB156 RB206 RB256 RB257 RB258	12	4.82	0.190	0.5 / 0.7	2	100°	M6x100	6.6	02084001PT
RB306 RB307	12	4.82	0.1898	0.5 / 0.7	2	130°	M8x100	6.6	02084008PT
	14	5.54	0.2181	0.5 / 0.7	2	130°	M8x100	7.2	02084009PT
	14	6.34	0.2496	0.5 / 0.7	2	100°	M8x100	6.8	02084003PT
	17	7.93	0.3122	0.8 / 1	2	100°	M8x100	7	02084004PT
	17	9.51	0.3744	0.8 / 1	2	100°	M8x100	7.25	02084005PT
	21	7.93	0.3122	0.8 / 1	2	130°	M8x100	11	02084014PT
	21	9.52	0.3748	0.8 / 1	2	130°	M8x100	13.24	02084016PT
RB406 RB356HP58	21	11.11	0.4374	1.1 / 1.3	3	100°	M10x100	7.5	02084006PT
	22.2	12.67	0.4988	1.1 / 1.3	3	100°	M10x100	7.7	02084007PT
	25	14.27	0.5618	1.1 / 1.3	3	100°	M10x100	7.9	02084010PT

EXPERT ADVICE

- In some cases, microstop cages are impractical or too bulky to be used. We then recommend to use drilling adapters, pg. 44.

*Alternative cutters can be made on request with special diameters, special thread (ex: 1/4-28F. M10x1….), special angles (ex : 90°. 120°....), carbide, HSS-E or PCD**
** Only to use only with pilots having a head dia ≥ shank dia + 0.5 mm (0.0196 in).*

Recoules Quackenbush®
Precision Drilling-Every Time

FOR USE WITH	ALUMINIUM	STEEL	TITANIUM	COMPOSITE	KEVLAR
Carbide	●	●	●	●	
HSS-E	●	●	●		
PCD*				●	
HSS-E					●
Carbide					●

Centering cone

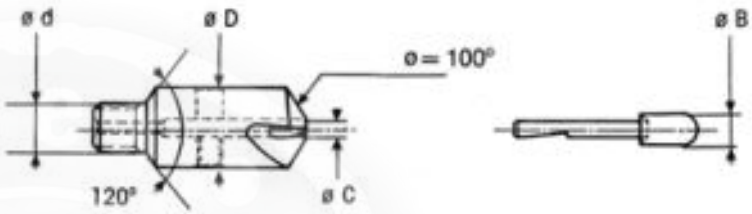

MICROSTOP CAGE REF CHAPTER A	CUTTER Ø D ± 0.1 mm	PILOT HEAD Ø B -0.02 mm -0.05 mm	PILOT HEAD Ø B -0.0007 in -0.0020 in	PILOT SHANK Ø C mm	NUMBERS OF FLUTES	THREAD Ø D	CUTTER + PILOT REF. HSS-E	CUTTER ONLY REF. HSS-E
RB 156 RB 206 RB 256 RB 257 RB 258	10	2.00	0.0787	2	2	M6 x 1	30220005	30220001
	10	2.38	0.0937	2	2	M6 x 1	30220010	30220001
	10	2.50	0.0984	2	2	M6 x 1	30220015	30220001
	10	2.80	0.1102	2.5	2	M6 x 1	30220110	30220101
	10	3.00	0.1181	2.5	2	M6 x 1	30220115	30220101
	10	3.17	0.1248	2.5	2	M6 x 1	30220120	30220101
	10	3.50	0.1377	2.5	2	M6 x 1	30220215	30220101
	10	4.00	0.1574	3.5	2	M6 x 1	30220310	30220301
	10	4.15	0.1634	3.5	2	M6 x 1	30220315	30220301
RB 306 RB 307	14	4.76	0.1874	4	2	M8 x 1	30222015	30222001
	14	4.80	0.1890	4	2	M8 x 1	30222025	30222001
	14	5.00	0.1968	4	2	M8 x 1	30222030	30222001
	14	5.60	0.2204	4	2	M8 x 1	30222040	30222001
	14	6.00	0.2362	4	2	M8 x 1	30222050	30222001
	14	6.35	0.2500	4	2	M8 x 1	30222055	30222001
	17	7.94	0.3126	5	3	M8 x 1	30223035	30223001
	17	8.00	0.3149	5	3	M8 x 1	30223040	30223001
	21	9.52	0.3748	5	3	M8 x 1	30224045	30224001
	21	10.00	0.3937	5	3	M8 x 1	30224050	30224001

EXPERT ADVICE

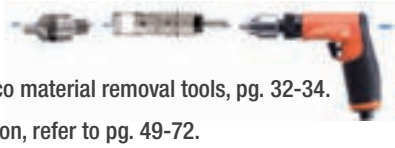

- We recommend using Dotco material removal tools, pg. 32-34.
- For microstop cage selection, refer to pg. 49-72.

Alternative cutters can be made on request with special diameters, special thread (ex: 1/4-28F. M10x1….), special angles (ex : 90°. 120°....), carbide. HSS-E or PCD
** Only to use only with pilots having a head dia ≥ shank dia + 0.5 mm (0.0196 in).*

Recoules Quackenbush
Precision Drilling-Every Time

ADVANTAGES

- High quality PCD inserts provide superior surface finish to composite materials requiring minimal effort from the operator.
- Superior characteristics of PCD ensure cutters with extended life.

FOR USE WITH	ALUMINIUM	STEEL	TITANIUM	COMPOSITE	KEVLAR
Carbide	●	●	●	●	
HSS-E	●	●	●		
PCD*				●	
HSS-E					●
Carbide					●

Centering cone

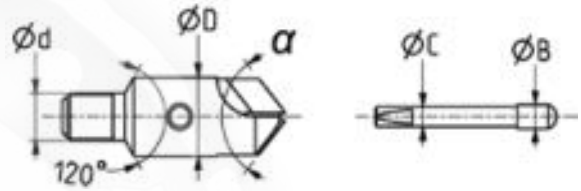

MICROSTOP CAGE REF CHAPTER A	CUTTER Ø D ± 0.1 mm	PILOT HEAD Ø B -0.02 mm -0.05 mm	PILOT HEAD Ø B 0.0007 in -0.0020 in	PILOT SHANK Ø C mm	NUMBERS OF FLUTES	THREAD Ø D	COUNTERSINKING ANGLE	CUTTER + PILOT REF. PCD*	CUTTER ONLY REF. PCD*
RB 156 RB 206 RB 256 RB 257 RB 258	10	2.40	0.0945	2	2	M6 x 1	100°	30500311	30500300
	10	3.00	0.1181	2.5	2	M6 x 1	100°	30500055	30500000
	10	3.17	0.1248	2.5	2	M6 x 1	100°	30500060	30500000
	10	3.50	0.1377	2.5	2	M6 x 1	100°	30500065	30500000
	10	4.00	0.1574	2.5	2	M6 x 1	100°	30500070	30500000
	10	4.00	0.1574	2.5	2	M6 x 1	130°	30503060	30503060
	10	4.15	0.1634	2.5	2	M6 x 1	100°	30500075	30500000
	14	-	-	2.5	2	M6 x 1	130°	-	02500591PT
	14	-	-	3.5	2	M6 x 1	130°	-	02500592PT
RB 306 RB 307	14	-	-	2.5	2	M8 x 1	130°	-	02500593PT
	14	-	-	3.5	2	M8 x 1	130°	-	02500586PT
	14	4.10	0.0614	4	2	M8 x 1	130°	30503166	30503160
	14	4.76	0.1874	4	2	M8 x 1	100°	30500105	30500100
	14	4.80	0.1890	4	2	M8 x 1	100°	30500110	30500100
	14	4.80	0.1890	4	2	M8 x 1	130°	30502160	30503160
	14	5.00	0.1968	4	2	M8 x 1	100°	30500115	30500100
	14	5.10	0.2007	4	2	M8 x 1	130°	30503165	30503160
	14	5.60	0.2204	4	2	M8 x 1	100°	30500120	30500100
	14	6.00	0.2362	4	2	M8 x 1	100°	30500125	30500100
	14	6.35	0.2500	4	2	M8 x 1	100°	30500130	30500100
	21	7.00	0.2756	5	3	M8 x 1	100°	30500203	30500200
	21	7.94	0.3126	5	3	M8 x 1	100°	30500205	30500200
	21	8.00	0.3149	5	3	M8 x 1	100°	30500210	30500200
	21	9.52	0.3748	5	3	M8 x 1	100°	30500215	30500200
	21	10.00	0.3937	5	3	M8 x 1	100°	30500220	30500200
	21	-	-	5	3	M8 x 1	130°	-	30503260

EXPERT ADVICE

- Our PDC cutters can be resharpened 3 to 4 times.

Alternative cutters can be made on request with special diameters, special thread (ex: 1/4-28F. M10x1….), special angles (ex : 90°. 120°....), carbide, HSS-E or PCD
** Only to use only with pilots having a head dia ≥ shank dia + 0.5 mm (0.0196 in).*

Recoules Quackenbush®
Precision Drilling-Every Time

FOR USE WITH	ALUMINIUM	STEEL	TITANIUM	COMPOSITE	KEVLAR
Carbide	●	●	●	●	
HSS-E	●	●	●		
PCD*				●	
HSS-E					●
Carbide					●

Centering cone

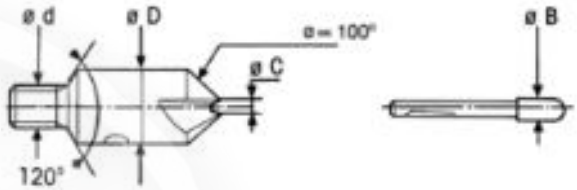

MICROSTOP CAGE REF CHAPTER A	CUTTER Ø D ± 0.1 mm	PILOT HEAD Ø B -0.02 mm -0.05 mm	PILOT HEAD Ø B -0.0007 in -0.0020 in	PILOT SHANK Ø C mm	NUMBERS OF FLUTES	THREAD THREAD Ø D	CUTTER + PILOT REF. CARBIDE	CUTTER ONLY REF. CARBIDE
RB 156 RB 206 RB 256 RB 257 RB 258	10	2.00	0.0787	2	3	M6 x 1	30320005	30320000
	10	2.38	0.0937	2	3	M6 x 1	30320010	30320000
	10	2.50	0.0984	2	3	M6 x 1	30320015	30320000
	10	2.80	0.1102	2.5	3	M6 x 1	30320110	30320100
	10	3.00	0.1181	2.5	3	M6 x 1	30320115	30320100
	10	3.17	0.1248	2.5	3	M6 x 1	30320120	30320100
	10	3.50	0.1377	2.5	3	M6 x 1	30320215	30320100
	10	4.00	0.1574	3.5	3	M6 x 1	30320310	30320300
	10	4.15	0.1634	3.5	3	M6 x 1	30320315	30320300
RB 306 RB 307	14	4.76	0.1874	4	3	M8 x 1	30322015	30322000
	14	4.80	0.1890	4	3	M8 x 1	30322025	30322000
	14	5.00	0.1968	4	3	M8 x 1	30322030	30322000
	14	5.60	0.2204	4	3	M8 x 1	30322040	30322000
	14	6.00	0.2362	4	3	M8 x 1	30322050	30322000
	14	6.35	0.2500	4	3	M8 x 1	30322055	30322000
	17	7.94	0.3126	5	3	M8 x 1	30323035	30323000
	17	8.00	0.3149	5	3	M8 x 1	30323040	30323000
	21	9.52	0.3748	5	2	M8 x 1	30324045	30324000
	21	10.00	0.3937	5	2	M8 x 1	30324050	30324000

EXPERT ADVICE

- We recommend using Dotco material removal tools, pg. 32-34.
- For microstop cage selection, refer to pg. 49-72.

Alternative cutters can be made on request with special diameters, special thread (ex: 1/4-28F. M10x1….), special angles (ex : 90°. 120°....), carbide, HSS-E or PCD
** Only to use only with pilots having a head dia ≥ shank dia + 0.5 mm (0.0196 in).*

Recoules Quackenbush®
Precision Drilling-Every Time

ADVANTAGES

- Unique cutter geometry provides excellent surface finish and prevents tearing of fibers.

FOR USE WITH	ALUMINIUM	STEEL	TITANIUM	COMPOSITE	KEVLAR
Carbide	●	●	●	●	
HSS-E	●	●	●		
PCD*				●	
HSS-E					●
Carbide					●

Centering cone

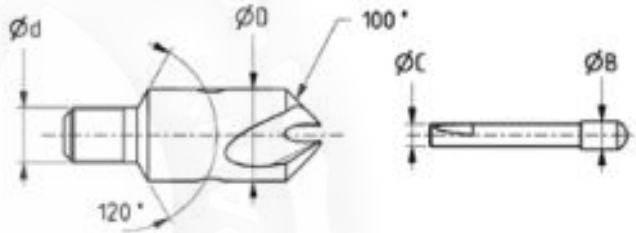

MICROSTOP CAGE REF CHAPTER A	CUTTER Ø D ± 0.1 mm	PILOT HEAD Ø B -0.02 mm -0.05 mm	PILOT HEAD Ø B -0.0007 in -0.0020 in	PILOT SHANK Ø C mm	NUMBERS OF FLUTES	THREAD Ø D	CUTTER + PILOT REF. HSS-E	CUTTER ONLY REF. HSS-E
RB 156 RB 206 RB 256 RB 257 RB 258	10	3.00	0.1181	2.5	2	M6 x 1	30600010	30600001
	10	3.17	0.1248	2.5	2	M6 x 1	30600015	30600001
	10	3.50	0.1377	2.5	2	M6 x 1	30600020	30600001
	10	4.00	0.1574	2.5	2	M6 x 1	30600025	30600001
	10	4.15	0.1634	2.5	2	M6 x 1	30600030	30600001
RB 306 RB 307	14	4.80	0.1890	4	2	M8 x 1	30600110	30600101
	14	5.00	0.1968	4	2	M8 x 1	30600115	30600101
	14	6.00	0.2362	4	2	M8 x 1	30600120	30600101
	14	6.35	0.2500	4	2	M8 x 1	30600125	30600101

EXPERT ADVICE

- Alternate pilots may be manufactured on request.
  e.g.: special diameters and lengths.

Alternative cutters can be made on request with special diameters, special thread (ex: 1/4-28F. M10x1….), special angles (ex : 90°. 120°....), carbide, HSS-E or PCD
** Only to use only with pilots having a head dia ≥ shank dia + 0.5 mm (0.0196 in).*

Recoules Quackenbush®
Precision Drilling-Every Time

ADVANTAGES

- Unique cutter geometry provides excellent surface finish and prevents tearing of fibers.

FOR USE WITH	ALUMINIUM	STEEL	TITANIUM	COMPOSITE	KEVLAR
Carbide	●	●	●	●	
HSS-E	●	●	●		
PCD*				●	
HSS-E					●
Carbide					●

Centering cone

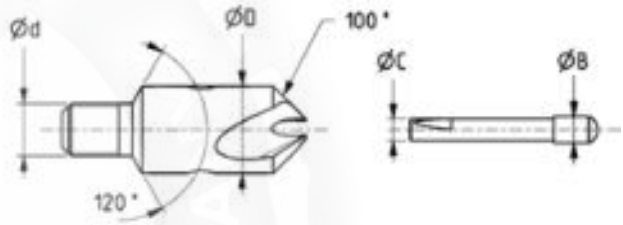

MICROSTOP CAGE REF CHAPTER A	CUTTER Ø D ± 0.1 mm	PILOT HEAD Ø B -0.02 mm -0.05 mm	PILOT HEAD Ø B -0.0007 in -0.0020 in	PILOT SHANK Ø C mm	NUMBERS OF FLUTES	THREAD Ø D	CUTTER + PILOT REF. CARBIDE	CUTTER ONLY REF. CARBIDE
RB 156 RB 206 RB 256 RB 257 RB 258	10	3.00	0.1181	2.5	2	M6 x 1	30601010	30601001
	10	3.17	0.1248	2.5	2	M6 x 1	30601015	30601001
	10	3.50	0.1377	2.5	2	M6 x 1	30601020	30601001
	10	4.00	0.1574	2.5	2	M6 x 1	30601025	30601001
	10	4.15	0.1634	2.5	2	M6 x 1	30601030	30601001
RB 306 RB 307	14	4.80	0.1890	4	2	M8 x 1	30601110	30601101
	14	5.00	0.1968	4	2	M8 x 1	30601115	30601101
	14	6.00	0.2362	4	2	M8 x 1	30601120	30601101
	14	6.35	0.2500	4	2	M8 x 1	30601125	30601101

EXPERT ADVICE

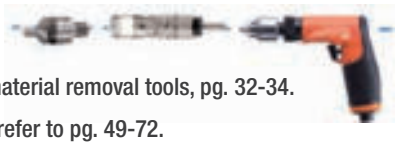

- We recommend using Dotco material removal tools, pg. 32-34.
- For microstop cage selection, refer to pg. 49-72.

Alternative cutters can be made on request with special diameters, special thread (ex: 1/4-28F. M10x1….), special angles (ex : 90°. 120°....), carbide, HSS-E or PCD
** Only to use only with pilots having a head dia ≥ shank dia + 0.5 mm (0.0196 in).*

Recoules Quackenbush®
Precision Drilling-Every Time

FOR USE WITH	ALUMINIUM	STEEL	TITANIUM	COMPOSITE
Carbide	●	●	●	
HSS-E	●	●	●	
PCD*				●

Centering cone

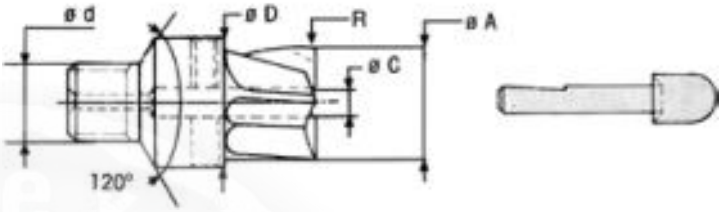

MICROSTOP CAGE REF CHAPTER A	Ø SPOTFACING DIA mm	Ø SPOTFACING DIA in	CUTTERS BODY Ø D mm	SHANK DU PILOT Ø C mm	NUMBER OF FLUTES	THREAD Ø D	CUTTER REF. HSS-E R = 0 mm	CUTTER REF. HSS-E R = 1 mm	CUTTER REF. HSS-E R = 2 mm	CUTTER REF. CARBIDE R = 0 mm
RB 156 RB 206 RB 256 RB 257 RB 258	5	0.1968	10	2	4	M6 x 1	31000000	31001002	-	-
	6	0.2362	10	2	4	M6 x 1	31000005	31001007	-	-
	7	0.2755	10	2	4	M6 x 1	31000010	31001012	-	-
	8	0.3149	10	2	4	M6 x 1	31000015PT	31001017	-	-
	9	0.3543	10	2	4	M6 x 1	31000020	31001022	-	-
RB 306 RB 307	10	0.3937	10	2	4	M6 x 1	31000025	31001030	-	02506010PT
	11	0.4330	11	3	4	M8 x 1	31000100PT	31001101	31001103	-
	12	0.4724	12	3	4	M8 x 1	31000105	31001106	31001108	02506012PT
	13	0.5118	13	3	4	M8 x 1	31000110	31001111	31001113	02506013PT
	14	0.5511	14	3	4	M8 x 1	31000115	31001120	31001130	02506014PT
	15	0.5905	15	4	4	M8 x 1	31000200PT	31001201	31001203	02506015PT
	16	0.6299	16	4	4	M8 x 1	31000205	31001206	31001208	02506016PT
	17	0.6692	17	4	4	M8 x 1	31000210	31001215	31001225	02506017PT
	18	0.7086	18	4	4	M8 x 1	31000300PT	31001301	31001303	02506018PT
	19	0.7480	19	4	4	M8 x 1	31000305	31001306	31001308	02506019PT
	20	0.7874	20	4	4	M8 x 1	31000310	31001311	31001313	02506020PT
	21	0.8267	21	4	4	M8 x 1	31000315	31001320	31001330	02506021PT
RB 406	22	0.8661	22	5	4	M10 x 1	31000400PT	31001401	31001404	-
	24	0.9448	24	5	4	M10 x 1	31000410	31001413	31001420	-
	25.4	1.000	25.4	5	4	M10 x 1	31000500PT	31001501	31001503	-
	26	1.0236	26	5	4	M10 x 1	31000505	31001506	31001508	-
	28	1.1023	28	5	4	M10 x 1	31000510	31001511	31001513	-
	30	1.1811	30	5	4	M10 x 1	31000520	31001521	31001523	-
	38.1	1.5000	38.1	5	4	M10 x 1	31000600PT	31001610	31001620	-

EXPERT ADVICE

- Alternate cutter example: combined carbide cutter chamfer + counterbore.

Alternative cutters can be made on request with special diameters, special thread (ex: 1/4-28F. M10x1….), special angles (ex : 90°. 120°....), carbide, HSS-E or PCD
** Only to use only with pilots having a head dia ≥ shank dia + 0.5 mm (0.0196 in).*

Recoules Quackenbush®
Precision Drilling-Every Time

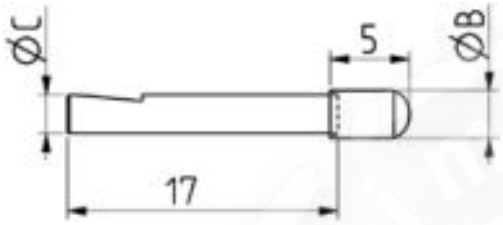

HEAD Ø B		SHANK Ø C mm	PILOT REF.
-0.02 mm -0.05 mm	-0.0007 in -0.0020 in		
3.80	0.1496	3.5	31100300
4.00	0.1574	3.5	31100305
4.15	0.1634	3.5	31100310
4.80	0.1890	3.5	31100315
5.00	0.1968	3.5	31100320
4.00	0.1574	4	31100400
4.50	0.1771	4	31100405
4.76	0.1874	4	31100410
4.80	0.1890	4	31100415
5.00	0.1968	4	31100420
5.50	0.2165	4	31100425
5.60	0.2204	4	31100430
6.00	0.2362	4	31100440
6.20	0.2441	4	31100444
6.30	0.2480	4	31100446
6.35	0.2500	4	31100445
7.00	0.2756	4	31100460
7.90	0.3110	4	31100478
8.00	0.3149	4	31100455
6.35	0.2500	5	31100515
7.00	0.2755	5	31100520
9.30	0.3661	5	31100586

HEAD Ø B		SHANK Ø C mm	PILOT REF.
-0.02 mm -0.05 mm	-0.0007 in -0.0020 in		
2.00	0.0787	2	31100000
2.38	0.0937	2	31100005
2.40	0.0944	2	31100006
2.45	0.0964	2	31100009
2.50	0.0984	2	31100010
3.00	0.1181	2	31100020
3.17	0.1248	2	31100025
3.20	0.1259	2	31100024
3.50	0.1377	2	31100030
4.00	0.1574	2	31100035
4.80	0.1890	2	31100056
2.50	0.0984	2.5	31100100
2.80	0.1102	2.5	31100105
3.00	0.1181	2.5	31100110
3.17	0.1248	2.5	31100115
3.20	0.1259	2.5	31100114
3.50	0.1377	2.5	31100120
3.60	0.1417	2.5	31100122
4.00	0.1574	2.5	31100130
4.15	0.1634	2.5	31100131
4.40	0.1732	2.5	31100138
4.46	0.1755	2.5	03590513PT
4.60	0.1811	2.5	31100142
4.76	0.1874	2.5	31100145
4.80	0.1890	2.5	31100133
5.00	0.1968	2.5	31100135
5.50	0.2165	2.5	03590436PT
6.35	0.2500	2.5	31100177
3.00	0.1181	3	31100200
3.17	0.1248	3	31100205
3.20	0.1259	3	31100206
3.50	0.1377	3	31100210
4.00	0.1574	3	31100220
4.80	0.1890	3	31100236
5.00	0.1968	3	31100225
5.50	0.2165	3	31100250
6.00	0.2362	3	31100230

EXPERT ADVICE

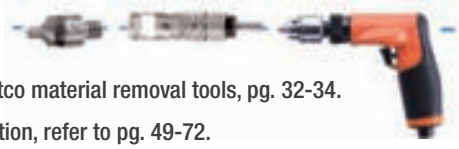

- We recommend using Dotco material removal tools, pg. 32-34.
- For microstop cage selection, refer to pg. 49-72.

Alternative pilots may be manufactured on request. e.g.: special diameters and lengths.

Recoules Quackenbush®
Precision Drilling-Every Time

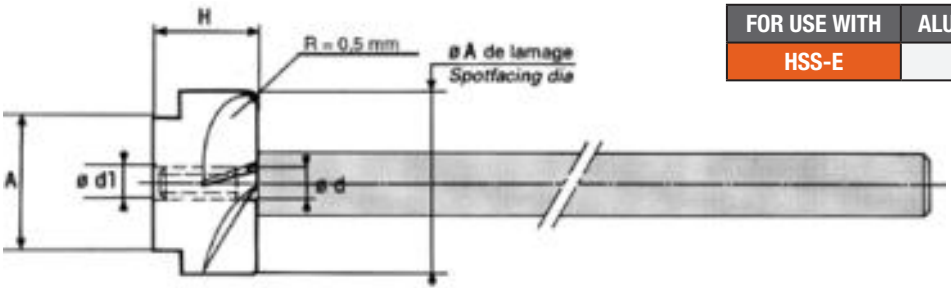

FOR USE WITH	ALUMINIUM	STEEL	TITANIUM	COMPOSITE
HSS-E	●	●	●	

BACK SPOTFACING CUTTERS	Ø SPOTFACING DIA		Ø D1	Ø D H9 mm	H ± 0.5 mm	A ACROSS FLATS -0.00 mm -0.10 mm	CUTTER REF.
	mm	in					
	10	0.3937	M4 x 0.7	4	10	6	31500035
	12	0.4724	M4 x 0.7	4	10	6	31500065
	14	0.5511	M4 x 0.7	4	10	10	31500095

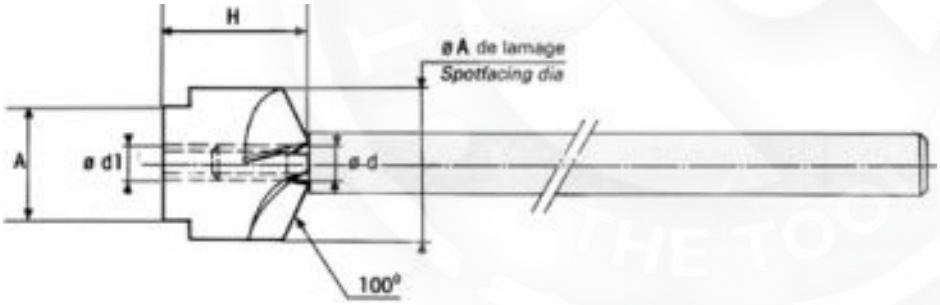

BACK COUNTERSINK CUTTERS	Ø SPOTFACING DIA		Ø D1	Ø D H9 mm	H ± 0.5 mm	A ACROSS FLATS -0.00 mm -0.10 mm	CUTTER REF.
	mm	in					
	6	0.2362	M2 x 0.4	2	7	5	31601000
	8	0.3149	M3 x 0.5	3	10	6	31601025

EXPERT ADVICE

- To use with our back spotfacing guns, pg. 41-42.

Alternative cutters can be made on request with special diameters and/or radius; See next page for pilot selection.

Recoules Quackenbush®
Precision Drilling-Every Time

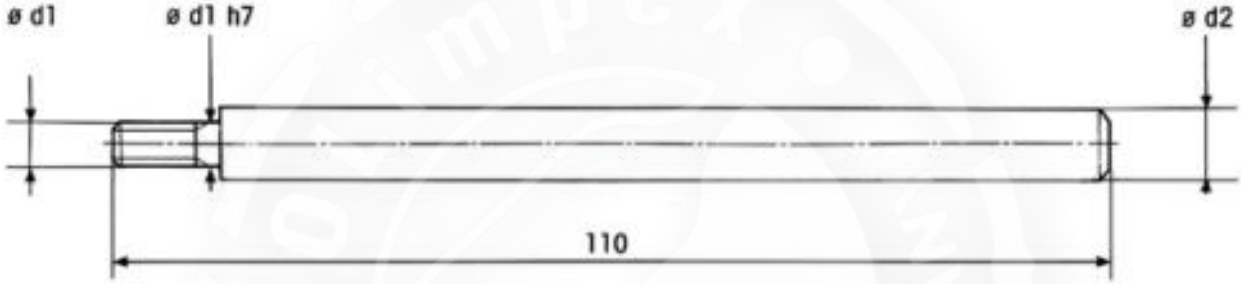

Ø d1	PILOT		PILOT REF.
	-0.02 mm -0.05 mm	-0.0007 in -0.0020 in	
M2 x 0.4	2.35	0.0925	31700000
M2 x 0.4	2.50	0.0984	31700005
M3 x 0.5	3.00	0.1181	31700200
M3 x 0.5	4.00	0.1574	31700210
M4 x 0.7	4.00	0.1574	31700300
M4 x 0.7	4.75	0.1870	31700310
M4 x 0.7	5.00	0.1986	31700315
M4 x 0.7	6.00	0.2362	31700325

EXPERT ADVICE

- Special attachment diameter can be made to collet size.
- To be used with backspotfacing and countersink cutters.

Alternative pilots can be manufactured on request with special diameters and lengths.

Recoules Quackenbush
Precision Drilling-Every Time

FOR USE WITH	ALUMINIUM	STEEL	TITANIUM	COMPOSITE
Carbide	●	●	●	
HSS-E	●	●	●	
PCD*				●

* Carbide cutters: Ø 8 mm - Ø 18 mm Ü H = 16 mm

BACK SPOTFACING CUTTERS	Ø SPOTFACING DIA mm	Ø SPOTFACING DIA in	RADIUS R mm	H mm	Ø PILOT HOLE DIA mm	Ø D1	CUTTER REF. HSS-E	RING REF.
Retaining ring	8	0.3149	0.5	10	3	8	31300000	91825010
	10	0.3937	0.5	10	3	8	31300025	91825010
	10	0.3937	2	10	3	8	31302035	91825010
	12	0.4724	0.5	10	3	10	31300050	91825015
	12	0.4724	2	10	3	10	31302060	91825015
	14	0.5511	1	10	3	10	31300125	91825015
	14	0.5511	2	10	3	10	31302135	91825015
	14	0.5511	1	16	4	10	31300150	91825015
	14	0.5511	2	16	4	10	31302160	91825015
	16	0.6299	1	16	4	14	31300200	91825025
	16	0.6299	2	16	4	14	31302210	91825025
	18	0.7086	1	16	4	14	31300250	91825025
	20	0.7874	1	16	4	14	31300300	91825025

BACK COUNTERSINK CUTTERS	Ø SPOTFACING DIA mm	Ø SPOTFACING DIA in	H mm	Ø PILOT HOLE DIA mm	Ø D1	CUTTER REF. HSS-E	RING REF.
Retaining ring	8	0.3149	10	3	8	31306000	91825010
	10	0.3937	10	3	8	31306025	91825015
	12	0.4724	10	3	8	31306050	91825020
	14	0.5511	10	3	10	31306150	91825025
	17	0.7083	10	3	10	31306225	91825030

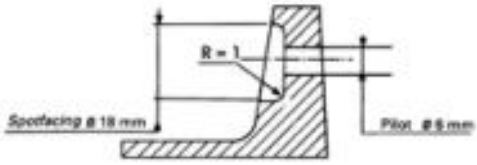

EXPERT ADVICE

- Necessary tools: cutter - 31300250, pilot - 31400125.

Alternative cutters can be made on request with special diameters and/or radius, special angles (ex : 90°. 120°....), carbide, HSS-E or PCD.*
See next page for pilot selection.

Recoules Quackenbush®
Precision Drilling-Every Time

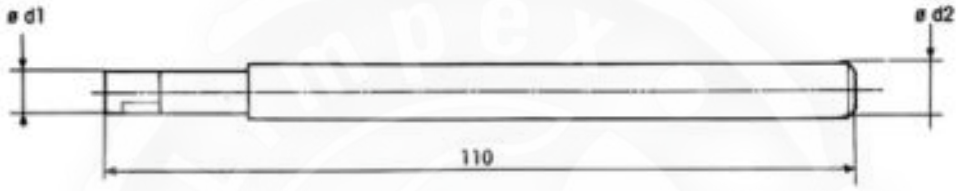

Ø d1	PILOT Ød2		PILOT REF.
	-0.00 mm -0.02 mm	-0.000 in. -0.0007 in	
2.5	2.50	0.0820	03596083PT
3	3.00	0.1181	31400000
3	3.20	0.1260	31400004
3	3.50	0.1377	31400005
3	4.00	0.1574	31400015
3	5.00	0.1968	31400020
4	4.00	0.1574	31400100
4	4.50	0.1771	31400105
4	4.80	0.1889	31400110
4	5.00	0.1968	31400115
4	6.00	0.2362	31400125
5	5.00	0.1968	31400200
5	6.00	0.2362	31400210
6	6.00	0.2362	31400300

EXPERT ADVICE

- To use with our back spotfacing guns, pg. 41-42.

Alternative pilots can be manufactured on request with special diameters and lengths.
To use with backspotfacing and countersink cutters.
Special attachment diameter can be made to collet size.

Recoules Quackenbush®
Precision Drilling-Every Time

ADVANTAGES

- Drilling and countersinking of all rivet holes can be achieved in one operation.
- Cutter diameters have been designed to meet requirements of various riveting specifications.

FOR USE WITH	ALUMINIUM	STEEL	TITANIUM	COMPOSITE
Carbide	●	●	●	
HSS-E	●	●	●	
PCD*				●

* PCD cutters countersinking section.

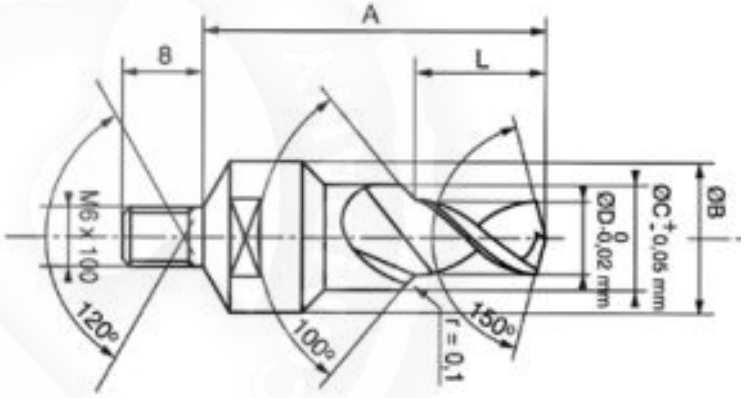

EXPERT ADVICE

- The RB 018 drill and countersink cutter is suitable for use with any of the above microstop cages.

RB 356 HP 21

RB 356 HP 38

RB 356 HP 58

Alternative diameters, lengths, angles, radius, material (PCD, Carbide, HSS-E) are available on request. When ordering, please indicate material to drill, material thickness, holes diameter, tolerance required.

Recoules Quackenbush®
Precision Drilling-Every Time

ADVANTAGES

- Drilling and countersinking of all rivet holes can be achieved in one operation with tolerance of 0.003 in (0.07 mm) according to nominal diameter, which meets the requirements of most riveting specifications.

FOR USE WITH	ALUMINIUM	STEEL	TITANIUM	COMPOSITE
Carbide	●	●	●	
HSS-E	●	●	●	
PCD*				●

* PCD cutters countersinking section.

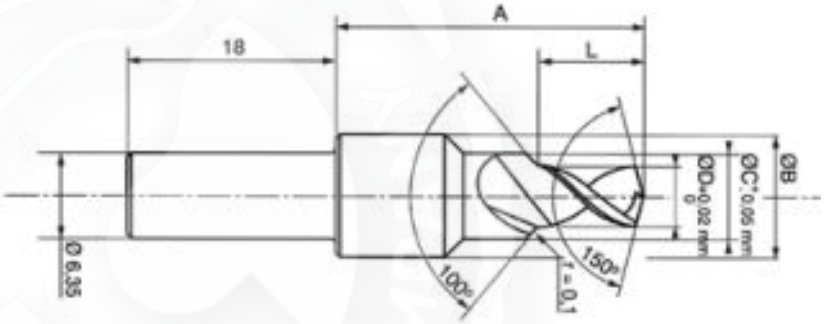

NOMINAL RIVET		DIA C		L		DIA C		A		DIA B		DRILL CAPACITY		PART N° HSS-E	PART N° CARBIDE
mm	in	mm	in	mm	in	mm	in	mm	in	mm	in	mm	in		
3.20	1/8	3.20	0.126	7.00	0.276	7.00	0.276	26.00	1.023	10.00	0.394	6.00	0.236	32800100	32802100
4.00	5/32	4.00	0.157	7.00	0.276	10.00	0.394	26.00	1.023	10.00	0.394	5.50	0.216	32800200	32802200
4.00	5/32	4.00	0.157	12.00	0.472	10.00	0.394	26.00	1.023	10.00	0.394	10.00	0.394	32800205	32802205
4.80	3/16	4.80	0.189	12.00	0.472	10.00	0.394	26.00	1.023	10.00	0.394	10.50	0.413	32800260	32802260

RB 019 HP: HIGH-PRECISION CUTTERS

- On request only. we can supply the RB 019 HP in HSS-E, carbide, or PCD to use on aluminum alloy or titanium, which will guarantee a hole accuracy of 0.0012 in (0.03 mm). These cutters with special grinding, polished flutes, and a drill point concentric to less than 0.0005 in (0.01 mm) are commonly used for HI-LITE or HUCK LGP fasteners installation.
- When ordering, please indicate: material to drill, material thickness, hole diameter, and tolerance required.

Alternative RB019 may be made on request with special diameters and dimensions carbide, HSS-E, or PCD.

Recoules Quackenbush®
Precision Drilling-Every Time

PRECISION MANUFACTURING

- On request only, we can supply the RB 020 HP in HSS-E, carbide, or PCD to use on aluminum alloy or titanium, which will guarantee a hole accuracy of 0.0012 in (0.03 mm). These cutters are manufactured with special grinding, polished flutes, and a drill point concentric to less than 0.0005 in (0.01 mm).
- When ordering, please indicate: material to drill, material thickness, hole diameter and tolerance required.

FOR USE WITH	ALUMINIUM	STEEL	TITANIUM	COMPOSITE
Carbide	●	●	●	
HSS-E	●	●	●	
PCD*				●

* Carbide cutters: Ø 8 mm - Ø 18 mm Ü H = 16 mm

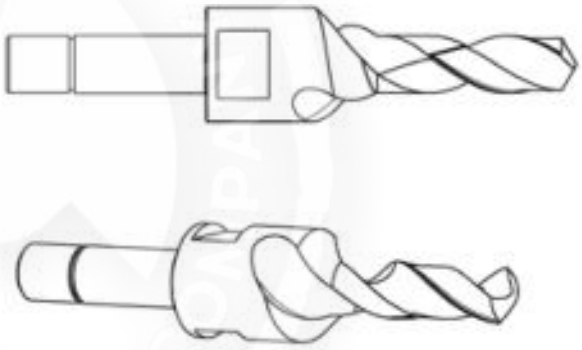

EXPERT ADVICE

- We recommend the use of Recoules Quackenbush ADE machines.

THREAD	M6	M8-M10-M12
ADE Machine	21500	20962

Recoules Quackenbush®
Precision Drilling-Every Time

ADVANTAGES

- This particular type of drill featuring a solid pilot and three flutes has been developed especially to produce finished holes in a single operation: reaming, countersinking, and producing the blend radius for all holes up to grade 8, locating in pre-drilled holes as reference.
- The non-cutting rear guide ensures perfect concentricity of the countersink, with no elongation of reamed holes.

FOR USE WITH	ALUMINIUM	STEEL	TITANIUM	COMPOSITE
Carbide	●	●	●	
HSS-E	●	●	●	
PCD*				●

* Carbide cutters: Ø 8 mm - Ø 18 mm Ü H = 16 mm

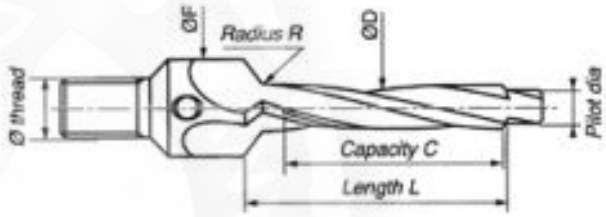

MICROSTOP CAGE REF CHAPTER A	THREAD Ø D	REAMER DIA Ø D		L MAXI		MAXI BODY DIA F		DRILL CAPACITY C MAXI	
		mm	in	mm	in	mm	in	mm	in
RB 356 HP 21	M6 x 1	3.20 - 4.20	0.125 - 0.165	20	0.787	10	0.393	12	1/2
RB 356 HP 38	M6 x 1	3.20 - 4.21	0.125 - 0.165	36	1.417	10	0.393	25	1
RB 356 HP 21	M6 x 1	4.30 - 6.35	0.169 - 1/4	20	0.787	14	0.551	12	1/2
RB 356 HP 38	M6 x 1	4.30 - 6.35	0.169 - 1/4	36	1.417	14	0.551	25	1
RB 356 HP 58	M10 x 1	6.35 - 8.00	1/4 - 0.315	40	1.574	17	0.669	30	1.181
RB 356 HP 58	M10 x 1	8.00 - 10.00	0.315 - 0.393	40	1.574	21	0.826	30	1.181

Example ordering information RB 022:

1	2	3	4	5	6	7
Basic ref.	A = Light alloy S = steel, titanium	C'sink angle	Radius R	Ø drill dia	Capacity	Ø Pilot dia
RB 022	A	100°	02/04	482	25	32

RB 356 HP 21 RB 356 HP 38 RB 356 HP 58

EXPERT ADVICE

- The RB 022 drill- ream and countersink cutter is suitable for use with any of the above microstop cages.

Alternative diameters, lengths, radius, materials (PCD, Carbide, HSS-E) are available on request. On request 1/4-28 cutter thread.

Recoules Quackenbush®
Precision Drilling-Every Time

FOR USE WITH	ALUMINIUM	STEEL	TITANIUM	COMPOSITE
Carbide	●	●	●	
HSS-E	●	●	●	

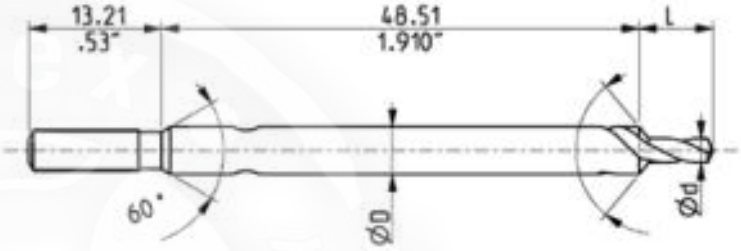

TYPE	SHANK DIA D		DRILL DIA D		DRILL LENGTH L		COUNTERSINK ANGLE	EXTERNAL THREAD	PART N° HSS-E	PART N° CARBIDE
	mm	in	mm	in	mm	in				
WD40 100 25	4.76	0.1875	2.49	0.0980	7.49	0.2950	100°	8-32	32820010	-
WD40 100 35	4.76	0.1875	2.49	0.0980	10.67	0.4200	100°	8-32	32820110	-
WD40 M3 100 25	4.76	0.1875	2.49	0.0980	7.49	0.2950	100°	8-32	-	02110004PT

EXPERT ADVICE

- To use with our nutplate drill 10 QNDP, pg. 18.

Alternative WD and WDS series drill-countersink cutters are available on request. When ordering, please state code and series number.

Recoules Quackenbush®
Precision Drilling - Every Time

ADVANTAGES

- These cutters are manufactured with a left hand helix. This ensures swarf dispersion towards the tip of the cutter, improving the working conditions for the operator.
- Can be used on thicknesses up to 6 mm in light alloys.
- For certain jobs where the routing operation is in the middle of the plate (such as routing windows or inspection doors). ground point cutters are recommended.

FOR USE WITH	ALUMINIUM	STEEL	TITANIUM	COMPOSITE
Carbide	●			
HSS-E	●			
PCD*				●

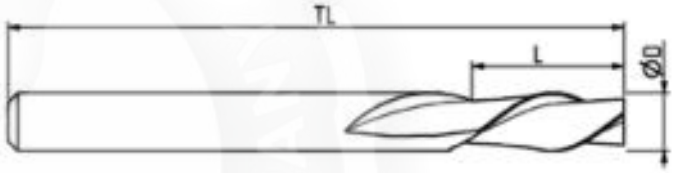

NOMINAL DIA. D		CUTTING LENGTH L		TOTAL LENGTH		REF. WITHOUT GROUND POINT	REF. WITH GROUND POINT
mm	in	mm	in	mm	in		
6.00	0.2362	15.00	0.5905	64.00	2.52	32600000	32600005
6.35	1/4	15.00	0.5905	64.00	2.52	32600050	32600055
7.94	5/16	15.00	0.5905	64.00	2.52	32600100	32600105

EXPERT ADVICE

- These router cutters are designed for use on all Dotco routers.

Alternative diameters, lengths, materials (PCD, Carbide, HSS-E) are available on request.

Recoules Quackenbush®
Precision Drilling-Every Time

ADVANTAGES

- Special drill reamers producing accurate holes without delamination.
- For small thickness material, we recommend the 4 fluted cutter.
- Diameter 0.094 in up to 0.393 in.

FOR USE WITH	ALUMINIUM	STEEL	TITANIUM	COMPOSITE
Carbide				●

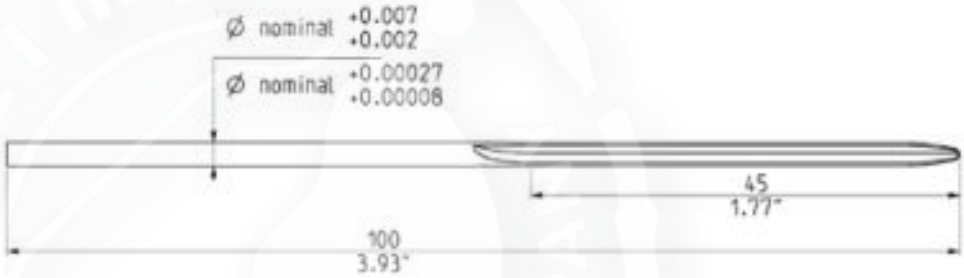

Example - for use with a drill of 3.17 mm dia:

3 FLUTED OGIVAL SHAPE

Basic Code		Drill size in 1/100 mm
32757	+	317

32757317
Code to indicate

4 FLUTED TAPERED SHAPE

Basic Code		Drill size in 1/100 mm
32755	+	317

32755317
Code to indicate

EXPERT ADVICE

- To use with our drill guides RB 240 - RB 245, pg. 47 and Dotco Pistol Drills, pg. 32-34.

For best results, Recoules Quackenbush recommends cutting speed of 125.150 sfpm. Workpiece must be clamped secure to reduce risk of vibration.

Recoules Quackenbush®
Precision Drilling-Every Time

SPECIFICATIONS

- HSS-E Cobalt
- 15° left hand spiral flutes
- Overall length: 100 mm / 4 in or 130 mm / 5.1 in
- Flute length: 60 mm / 2.36 in
- 90° ground points
- Taper lead length: 10 mm / 0.4 in
- Diameter from 3/32 in to 0.5 in
- All tolerances
- N°of flutes: up to dia 4.9 mm
  up to dia 13 mm

FOR USE WITH	ALUMINIUM	STEEL	TITANIUM	COMPOSITE
Carbide	●	●	●	●
HSS-E	●	●	●	

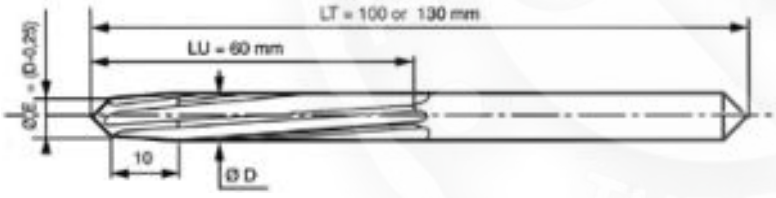

DIA REQUIRED	CODE NUMBER	
	LENGTH = 100 mm (4 in)	LENGTH = 130 mm (5.1 in)
4 U 9	33503108	-
4 X 7	33504104	33504105
4 Z 7	33506100	-
4.8 H 7	33500104	-
4.8 H 8	-	33500187
5 H 8	33500206	33500207
5 X 7	33504204	33504205
5.2 U 9	33503228	-
5.2 X 7	33504224	-
6 H 8	33500306	-
6 X 7	33504304	-
6.33 H 7	33500301	-
6.35 H 7	33500305	-
7.9 H 8	33500404	-
8 H 7	33500504	-
8.3 H 8	33500536	33500537
9.2 H 8	-	33500627
9.5 H 8	-	33500657
10 M 8	-	33501707
12 H 7	33500904PT	-

EXPERT ADVICE

- To use with our drill guides RB 240 - RB 245, pg. 47 and Dotco Pistol Drills, pg. 32-34.

On request, we can supply special reamers - diameters, length, tolerance, flutes, coating, shank according to your specifications.

Recoules Quackenbush®
Precision Drilling-Every Time

FOR USE WITH	ALUMINIUM	STEEL	TITANIUM	COMPOSITE
HSS	●			

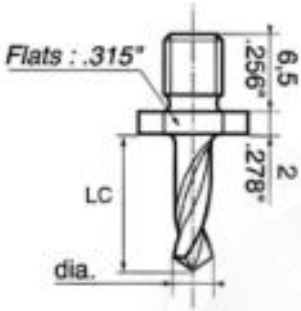

LC		DRILL DIAMETER		PART NUMBER
mm	in	mm	in	
8	0.315	3.20	0.1260	33000132
12	0.472	2.50	0.0984	33000020
12	0.472	3.00	0.1181	33000025
12	0.472	3.20	0.1260	33000030
12	0.472	4.00	0.1575	33000040
15	0.591	4.00	0.1575	33000240
15	0.591	4.80	0.1890	33000248
20	0.787	2.50	0.0984	33000625
20	0.787	3.20	0.1260	33000632

Alternative drills may be manufactured on request:
E.g. special diameters and lengths.

COUNTERSINK CUTTERS FOR FLAT OFFSET ANGLE DRILL

- HSS UNF 10-32F

FOR USE WITH	ALUMINIUM	STEEL	TITANIUM	COMPOSITE
HSS	●			

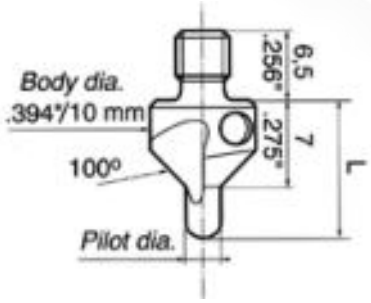

L		PILOT DIAMETER		PART NUMBER
mm	in	mm	in	
9.40	0.370	1.60	0.0630	33001005
10.60	0.417	2.40	0.0945	33001010
10.75	0.423	2.50	0.0984	33001015
11.60	0.456	3.20	0.1260	33001020

EXPERT ADVICE

- These cutters are designed for use with the flat offset angle drill RB 106 with UNF 10-32 F spindle thread, pg. 44.
- We recommend the use of Dotco pistol drills, pg. 32-34.

Alternative drills may be manufactured on request:
E.g. special diameters and lengths.

Recoules Quackenbush®
Precision Drilling-Every Time

PRECISION MANUFACTURING

- Used for cleaning paint, dirt, rust from around rivet or bolt holes. By placing the pilot in the rivet hole, the cleaning process is secure. Assures a positive electrical contact to eliminate static electricity buildup.
- Wire diameter 0.008 in.
- Solid item with a steel shank + pilot, nylon body in a copper sleeve, 4 steel brushes set at 90°.

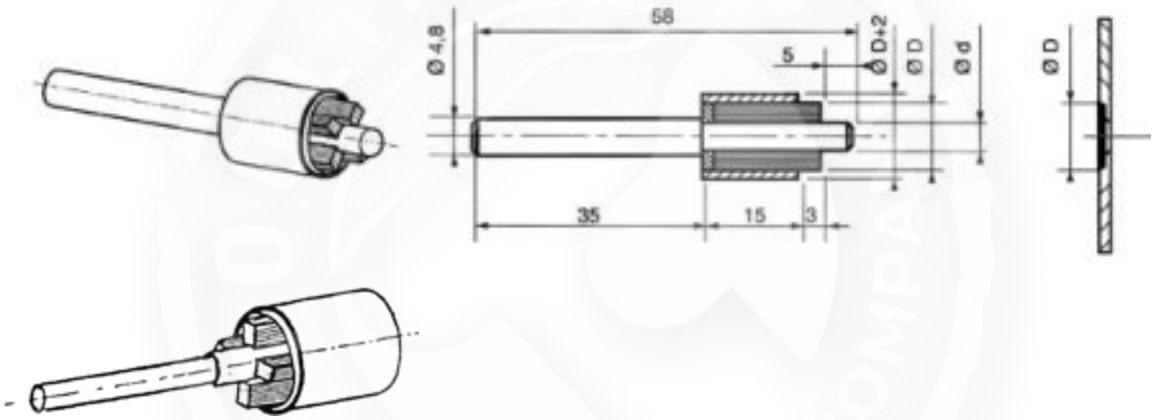

DIA D mm	DIA D mm	PART NUMBER
8	3.20	32110067
10	2.40	32110102
10	2.50	32110069
10	3.10	32110070
10	3.50	32110071
10	4.00	32110065
10	5.00	32110078
12	2.40	32110103
12	3.00	32110097
12	3.10	32110072
12	3.50	32110073
12	4.00	32110055

DIA D mm	DIA D mm	PART NUMBER
12	4.80	32110074
12	5.00	32110079
13	3.00	32110060
13	4.80	32110057
13	5.00	32110056
14	4.00	32110063
14	4.80	32110064
14	5.00	32110082
14	5.20	32110081
14	6.00	32110080
14	6.30	32110068

DIA D mm	DIA D mm	PART NUMBER
14	7.50	32110059
16	4.10	32110075
16	4.80	32110076
16	5.00	32110119
16	6.00	32110098
16	6.30	32110058
18	4.80	32110062
20	5.00	32110077
20	7.80	32110066
21	9.30	32110083
23	7.50	32110061

Backfacing wire brushes, code 32115.... and alternative diameters may be manufactured on request.

Recoules Quackenbush®
Precision Drilling-Every Time

Compression Riveter - Alligator Jaw | RB43, RB40-85, RB40-60, RB44-60 --- 100

Compression Riveter - C-Yoke | RB41, RB42 --- 102

Special C-Yokes | For RB41, RB42 Squeezers --- 104

Pressure Riveting Unit | RB46 --- 106

Special C-Yokes | For RB46 --- 108

Special Alligator Jaw | For RB46 --- 109

Hydropneumatic Generator - Hose | For RB46 --- 110

Riveting Cylinder | For RB46 --- 111

Rivet Squeezer Sets | RB400, RB401, RB402 --- 113

Flush Rivet Set - Swivel Type --- 114

Flush Rivet Set - Mushroom Type --- 115

Thickness Gauge - Hand-Riveting Pliers | RB41-17-70 --- 116

Hand-Riveting Pliers --- 117

Rivet Cutting Pliers | RB2015, RBI2015 --- 118

Ring Cutters --- 119

Rivet Hammers - Riveter | For F2-F4, F4-PT-RT-B --- 120

Rivet Sets | RB6081, RB6082, RB6083, RB6084, RB6085 --- 121

Rivet Shaver | 14CF Series --- 122

Recoules Quackenbush®
Precision Drilling-Every Time

DESCRIPTION

- Rivet set holder adjustment - stroke 0.2 in / 5 mm in allows the operator to use this compression riveter with different thicknesses without changing the rivet set.
- This light, sturdy, compact and fast compression riveter, has a maximum rivet capacity of 3/16 in dia for aluminum rivets (depending on the rivet joint thickness).
- Equipped with a safety throttle lever.
- Smooth controlled throttle movement for fast and slow approach.
- Alternative air inlet on request (example 1/4 BSP or 1/4 NPT)
- To develop maximum power the riveter must squeeze the rivet near to the end of the riveting stroke. Therefore, the combined length of the two rivets sets must be correct.

COMPRESSION RIVETER - ALLIGATOR JAWS								
Model	Part Number	Rivet Squeezer Set Shank Dia	Capacity Aluminum Rivets Diameter - in / mm	Maximum force at 6.3 bar / 90 PSI	Reach mm / in	Gap mm / in	Max Travel mm / in	Weight kg / lbs
RB43	60104010	5 mm	9/64 in / 3.6 mm	1.4 t / 3090 lbs	60 / 2.36	55 / 2.16	49 / 1.93	2.080 / 0.94
RB43	60104110	3/16 in	9/64 in / 3.6 mm	1.4 t / 3090 lbs	60 / 2.36	55 / 2.16	49 / 1.93	2.080 / 0.94
RB40-85	60101020	5 mm	9/64 in / 3.6 mm	1.8 t / 3970 lbs	85 / 3.35	55 / 2.16	49 / 1.93	3.100 / 1.41
RB40-85	60101120	3/16 in	9/64 in / 3.6 mm	1.8 t / 3970 lbs	85 / 3.35	55 / 2.16	49 / 1.93	3.100 / 1.41
RB40-60	60101010	5 mm	3/16 in / 4.8 mm	2.6 t / 5730 lbs	60 / 2.36	55 / 2.16	49 / 1.93	3.020 / 1.37
RB40-60	60101110	3/16 in	3/16 in / 4.8 mm	2.6 t / 5730 lbs	60 / 2.36	55 / 2.16	49 / 1.93	3.020 / 1.37
RB44-60	60110010	5 mm	7/32 in / 5.6mm	3.0 t / 6610 lbs	58 / 2.28	35 / 1.38	45 / 1.77	5.100 / 2.32
RB44-60	60110011	3/16 in	7/32 in / 5.6mm	3.0 t / 6610 lbs	58 / 2.28	35 / 1.38	45 / 1.77	5.100 / 2.32

TECH DATA
Part Number for Standard Alligator Jaws as shown on outline drawing - Special versions are available
RB44-60 Capacity Titanium Rivets 5/32 in / 4.0 mm
Select Rivet Set from: RB 400 for countersink rivets, RB 401 for universal head type rivets, RB 402 for special reduced universal head rivets, pg. 113.
Data at 6.3 bar / 90 psi

Recoules Quackenbush®
Precision Drilling - Every Time

DETERMINE THE CORRECT LENGTH OF RIVET SETS AS FOLLOWS:

E - A - B = C + D

A - component thickness
B - height of finished rivet head (flush)
C - rivet set height (fixed)
D - rivet set height (mobile)
E - closed height dimension of the jaws (adjust by moving the snap holder)

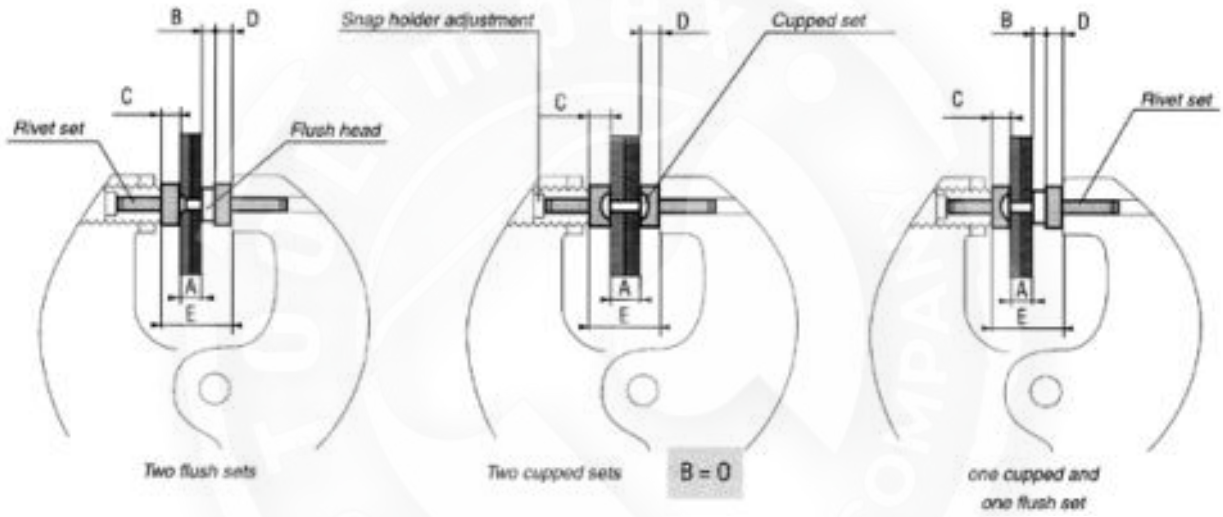

RB40-60

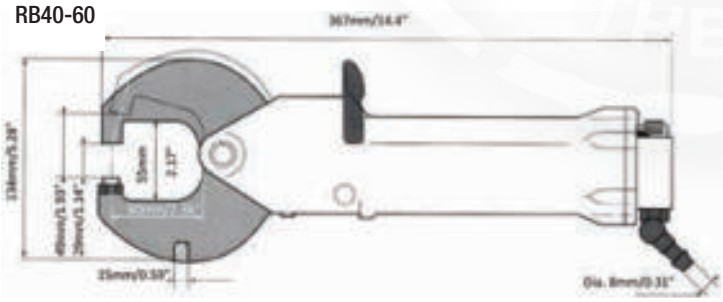

RB40-85

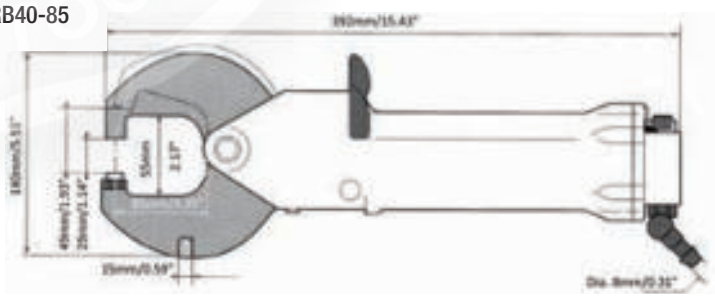

RB43

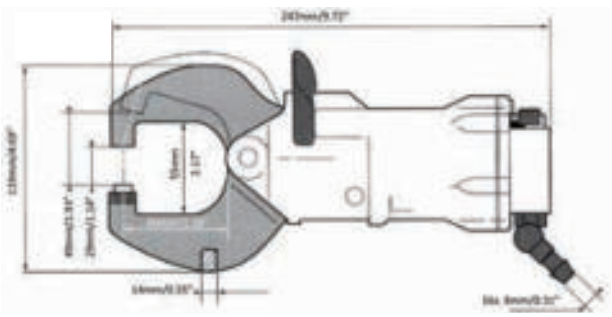

RB44-60

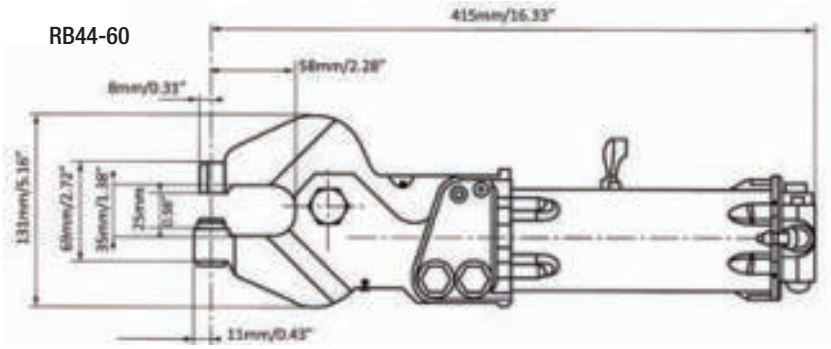

Recoules Quackenbush®
Precision Drilling-Every Time

DESCRIPTION

- Rivet set holder adjustment - stroke 0.12 in / 3 mm allows the operator to use this compression riveter with different thicknesses without changing the rivet set.
- This light, sturdy, compact and fast compression riveter has a maximum rivet capacity of 9/64 in dia (3.6 mm) for aluminum rivets (depending on the rivet joint thickness).
- Equipped with a safety throttle lever.
- Smooth controlled throttle movement for fast and slow approach.
- To develop maximum power the riveter must squeeze the rivet near to the end of the riveting stroke. Therefore, the combined length of the two rivets sets must be correct.

RB41

RB42

COMPRESSION RIVETER - C YOKE									
Model	Part Number	Rivet Squeezer Set Shank Diameter	Capacity Aluminum Rivets Diameter - in / mm	Maximum force at 6.3 bar / 90 PSI	Reach mm / in	Gap mm / in	Piston Stroke mm / in	Max Travel mm / in	Weight kg / lbs
RB 42	60103110	3/16 in	9/64 / 3.6	1.4 t / 3090 lbs	50 / 2.00	36 / 1.41	16 / 0.62	35 / 1.38	2.165 / 0.98
RB 42	60103010	5 mm	9/64 / 3.6	1.4 t / 3090 lbs	50 / 2.00	36 / 1.41	16 / 0.62	35 / 1.38	2.165 / 0.98
RB 41	60102110	3/16 in	3/16 / 4.8	2.2 t / 4850 lbs	50 / 2.00	35 / 1.38	12 / 0.47	34 /1.34	3.040 / 1.38
RB 41	60102010	5 mm	3/16 / 4.8	2.2 t / 4850 lbs	50 / 2.00	35 / 1.38	12 / 0.47	34 /1.34	3.040 / 1.38

TECH DATA
Part Number for Standard C Yoke Jaws as shown on outline drawing - Special versions are available
Select Rivet Set from: RB 400 for countersink rivets. RB 401 for universal head type rivets. RB 402 for special reduced universal head rivets, pg. 113.
Data at 6.3 bar / 90 psi

Recoules Quackenbush®
Precision Drilling-Every Time

DETERMINE THE CORRECT LENGTH OF RIVET SETS AS FOLLOWS:

E - A - B = C + D

A - component thickness
B - height of finished rivet head (flush)
C - rivet set height (fixed)
D - rivet set height (mobile)
E - closed height dimension of the jaws (adjust by moving the snap holder)

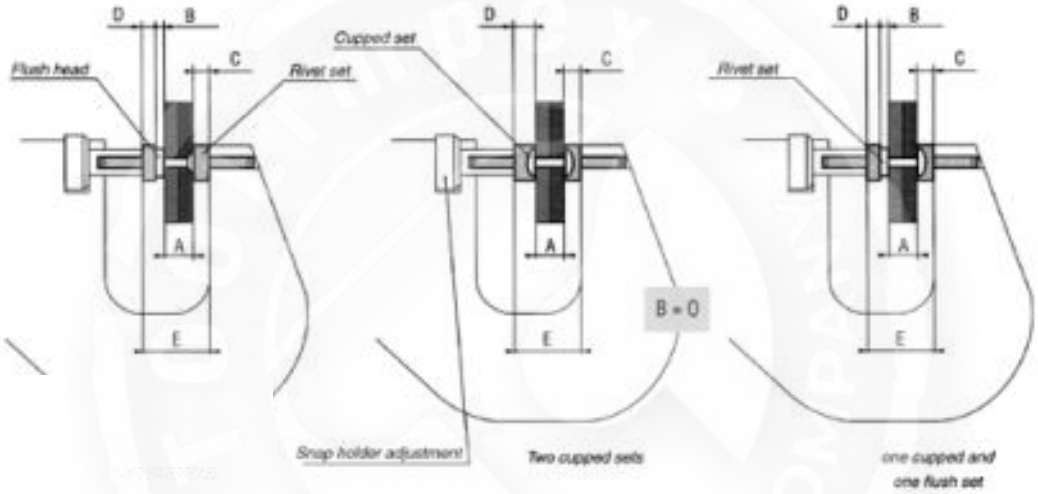

RB41

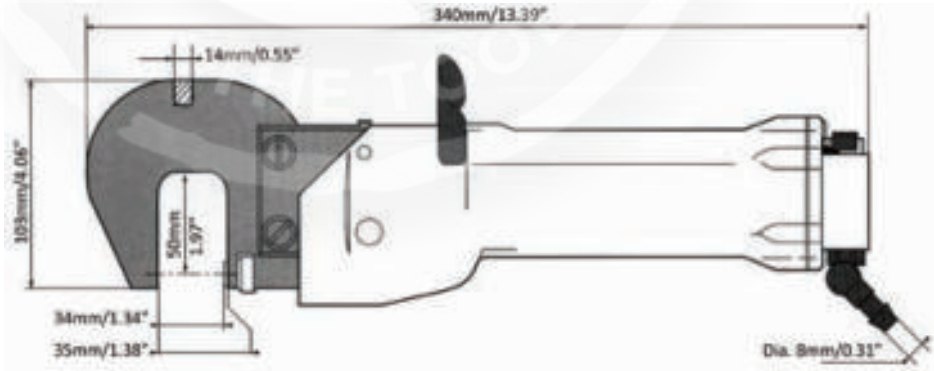

RB42

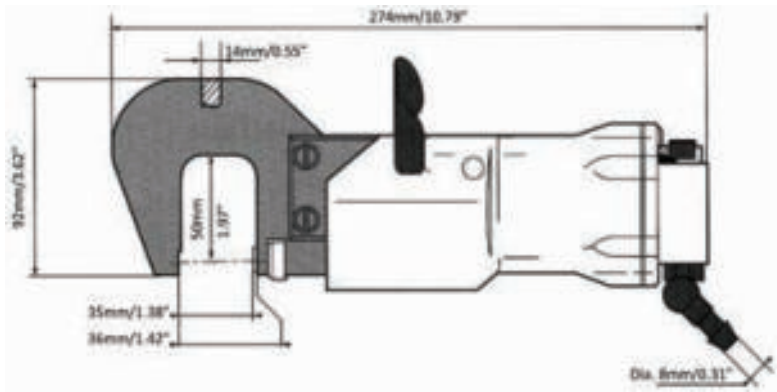

Recoules Quackenbush®
Precision Drilling-Every Time

DESCRIPTION

- For each special application, the C-yoke's shape is optimized for weight, flexibility, and strength with a fine element analysis software.

YOKE RB 41	YOKE RB 42
X = 39 mm / 1.54 in	X = 31 mm / 1.22 in

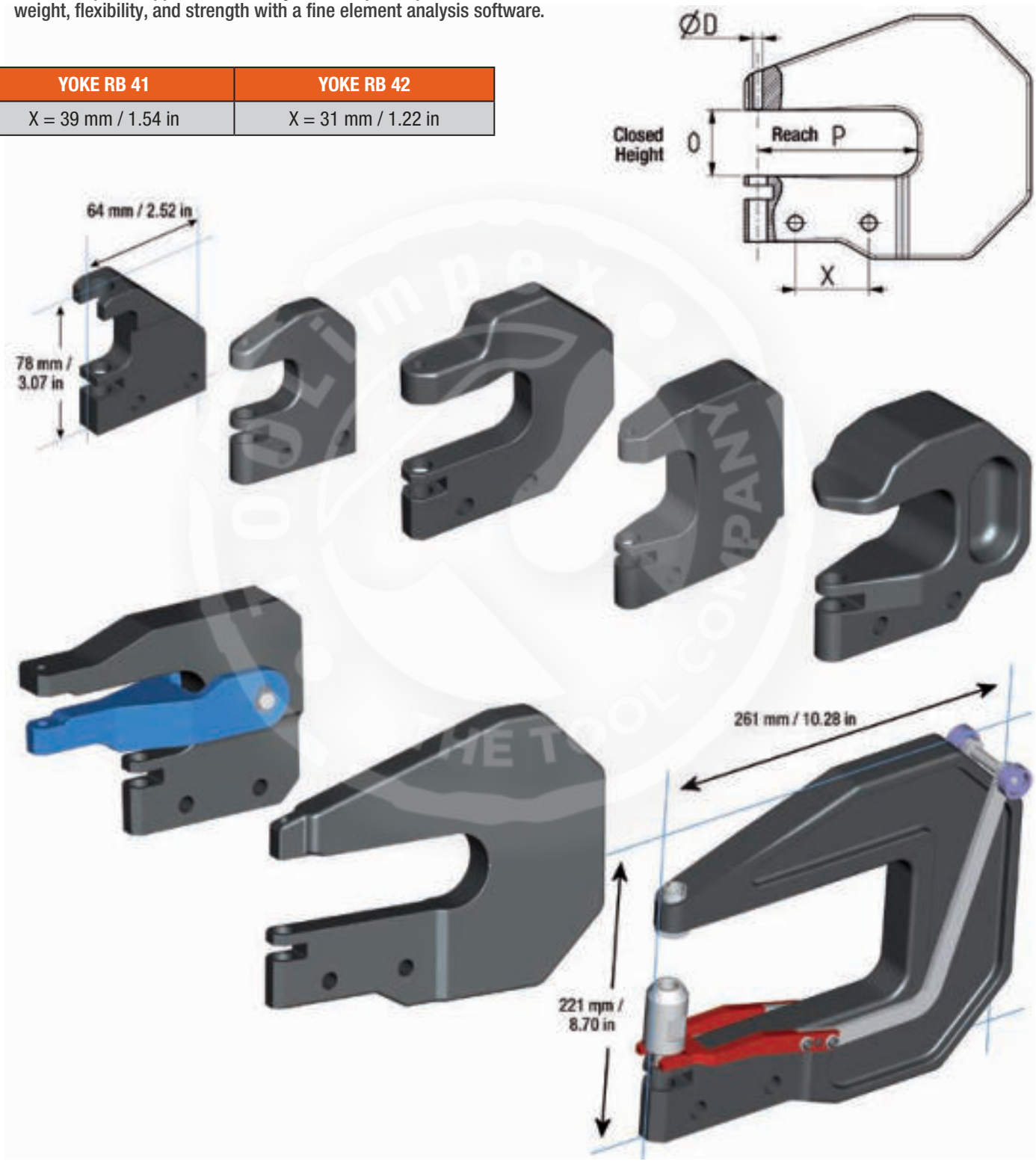

Alternative C-yokes may be made on request with special dimensions.
When ordering, please indicate: rivet diameter and material, rivet squeezer set shank diameter, reach "P", closed height "O" and X = 31 (RB 42) or X = 39 (RB 41).
Hundreds of models available on demand.

Recoules Quackenbush®
Precision Drilling-Every Time

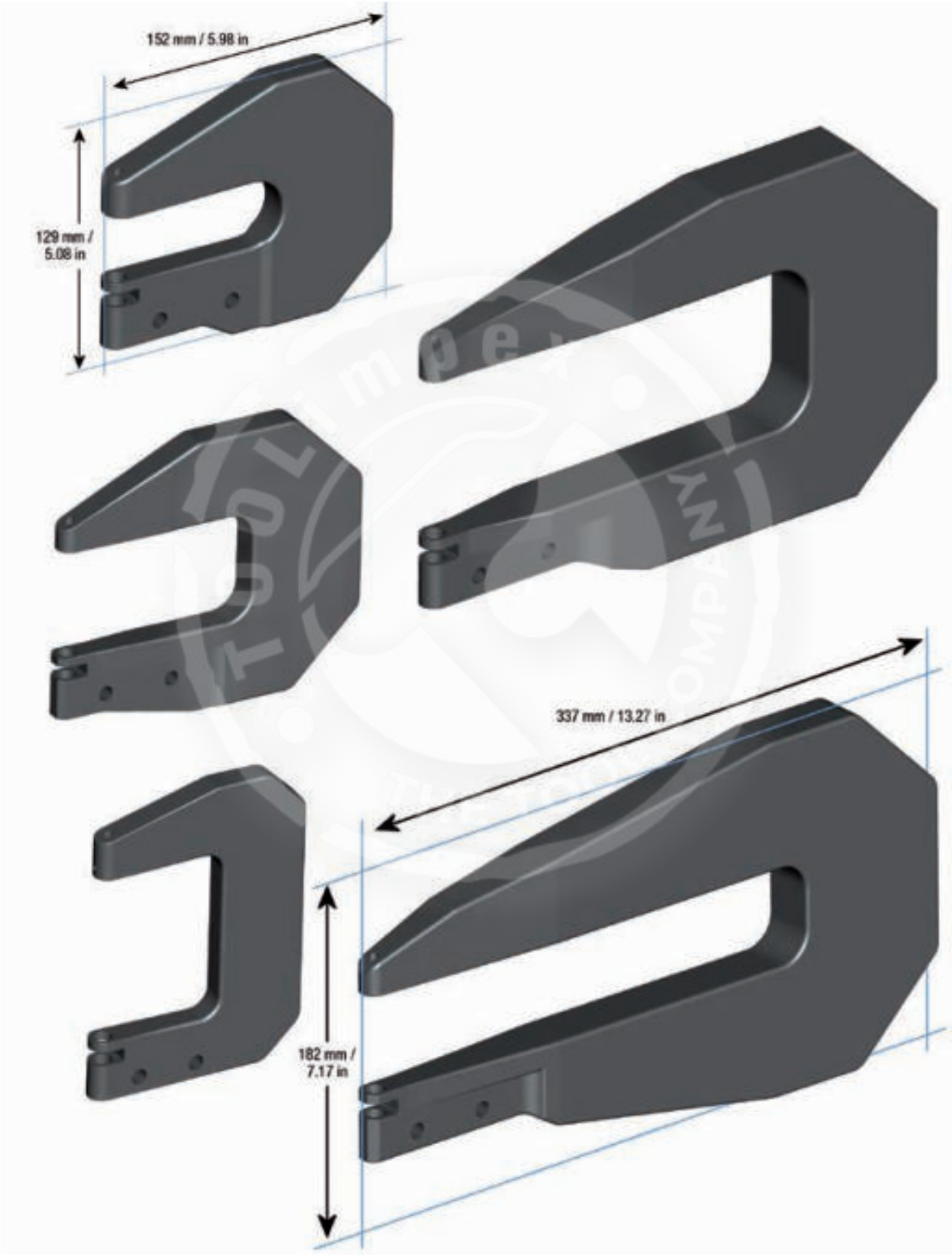

Recoules Quackenbush®
Precision Drilling-Every Time

RB 46-01 Manual cycle start-up and force adjustment on cylinder	STANDARD EQUIPMENT	RIVETING ASSEMBLY CODE NUMBER
	Hydropneumatic generator with 1.8 m / 5.9 ft hose 60300106	60203006
	Riveting cylinder with manual control on cylinder 60202005	
	Hydropneumatic generator with 3 m / 9.8 ft hose 60300206	60203106
	Riveting cylinder with manual control on cylinder 60202005	

RB 46-03 Pedal cycle start-up and force adjustment on generator	STANDARD EQUIPMENT	RIVETING ASSEMBLY CODE NUMBER
	Hydropneumatic generator with 1.8 m / 5.9 ft hose 60300111	60203016
	Riveting cylinder with connection block 60202010 Remote pedal control 60404005	
	Hydropneumatic generator with 3 m / 9.8 ft hose 60300211	60203116
	Riveting cylinder with connection block 60202010	
	Remote pedal control 60404005	

TECHNICAL DATA

Max. riveting dia. (depending on the rivet joint thickness):

Light alloy: 5/16 in - Ø 8 mm
Monel® metal: 1/4 in - Ø 6.35 mm
Titanium: 7/32 in - Ø 5.6 mm
Adjusting nut for return stroke

Min. force: 0.4 t
Max. force: 7 t
Max. cylinder stroke: 2.00 in - 50 mm

Recoules Quackenbush®
Precision Drilling-Every Time

DESCRIPTION

- The RB 46 pressure riveting assembly comprises a hydropneumatic generator, a hydraulic cylinder and a regulator for setting the force (max. 7 tonnes). It uses various standard and special yokes to form solid rivets made from various materials.
- It is easy to use and adjust, making it suitable for all riveting operations on assembly rigs and for maintenance repairs.
- The work cycle is performed automatically after initiation by the operator.
  - quick feed at low pressure until rivet contact
  - high pressure squeezing at preset forces
  - automatic return.
- The principle of this riveting assembly is based on automatic control of the squeezing force; no additional adjustment is required to squeeze rivets of the same type, diameter, and material on assemblies of varying thicknesses.
- An adjusting nut can be used to reduce the return stroke to shorten the riveting time.

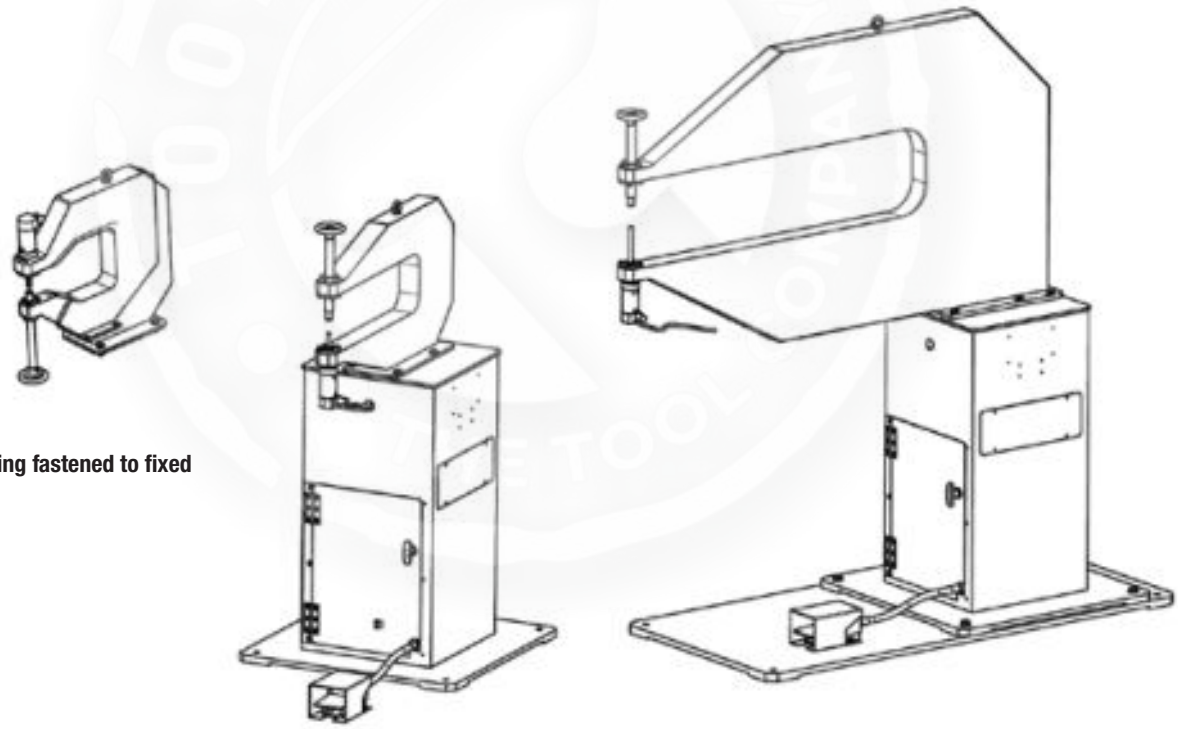

Assembly for riveting fastened to fixed frames examples

When ordering, indicate riveting assembly code number only.
Options on request: Special yokes,
Assembly for riveting, dimpling, and punching operations (fastened to fixed frames).

Recoules Quackenbush®
Precision Drilling-Every Time

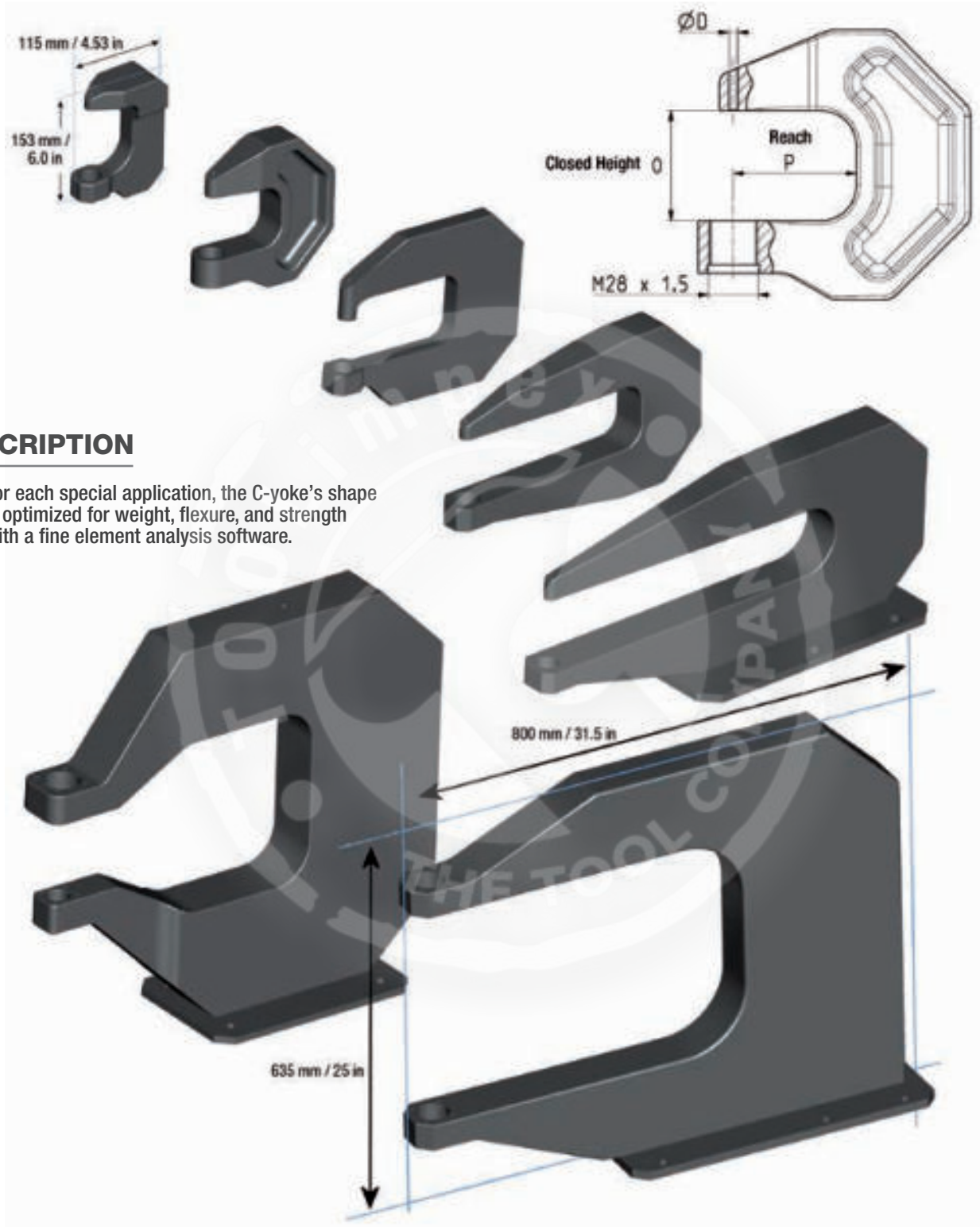

DESCRIPTION

- For each special application, the C-yoke's shape is optimized for weight, flexure, and strength with a fine element analysis software.

Alternative C-yokes may be made on request with special dimensions.
When ordering, please indicate: rivet diameter and material, rivet squeezer set shank diameter, reach "P", closed height "O".
Hundreds of models available on demand.

Recoules Quackenbush®
Precision Drilling-Every Time

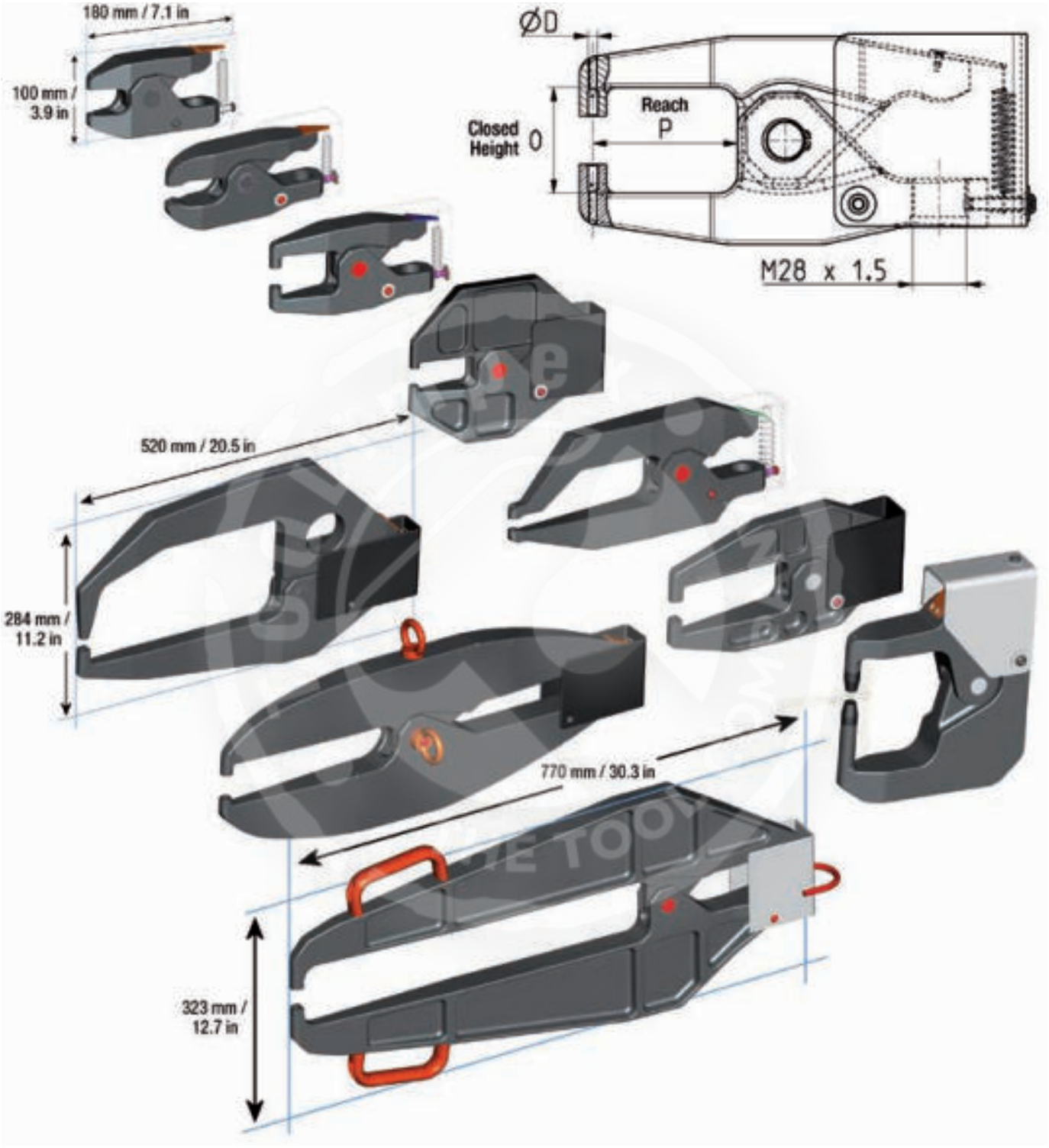

EXPERT ADVICE

- Refer to pg. 113 for rivet squeezer set selection (RB400, RB401, RB402).

Alternative alligator jaws may be made on request with special dimensions. When ordering, please indicate rivet diameter and material, rivet squeezer set shank diameter, reach "P", closed height "O". Hundreds of models available on demand.

Recoules Quackenbush
Precision Drilling-Every Time

DESCRIPTION

- This hydropneumatic generator comprises:
  - compressed air conditioning assembly with lubricating regulating cylinder.
  - wheeled trolley with a 4.5 l / 1.2 g oil tank with a working capacity of 2.8 l / 0.74 g.
  - two-stage low and high pressure pump.
- Hydraulic pressure can be adjusted (max. 10 KSI).
- The high pressure stage generates the preset force, either directly onto the cylinder (RB 46-01) or on the adjustment block (RB 46-03).
- The end of the automatic cycle takes place when the preset force is reached.

HYDROPNEUMATIC GENERATOR	CODE NUMBER
For RB 46-01	60300006
For RB 46-03	60300011

TECHNICAL DATA

Connection to compressed air network: 6 to 7 bars (87 - 101 psi)
Flow rate: 750 L/mn / 26 cfm
Pipe I.D.: Min 10 mm / 0.39 in

EXPERT ADVICE

- We recommend the use of MOBIL DTE.13 oil (5 liter can) #91450007.

HOSE For RB 46-01	LENGTH	RIVETING ASSEMBLY CODE NUMBER
	1.80 m / 5.9 ft	40150520
	3 m / 9.8 ft	40150530

6 m / 19.6 ft hose on request only.

HOSE For RB 46-03	LENGTH	RIVETING ASSEMBLY CODE NUMBER
	1.80 m / 5.9 ft	60300520
	3 m / 9.8 ft	60300530

6 m / 19.6 ft hose on request only.

Recoules Quackenbush®
Precision Drilling-Every Time

DESCRIPTION

- This cylinder performs an automatic work cycle. A hydraulic pressure controller permits automatic force control, whatever the pressure variation in the hydropneumatic generator power system.
- The automatic force control operates along the entire stroke. It enables rivets of the same type, diameter, and material to be squeezed on assemblies of varying thicknesses without additional adjustment.
- Safety device preventing accidental startup with the manual control cylinder version.

RIVETING CYLINDER	CODE NUMBER
Riveting cylinder with manual control on cylinder For RB 46-01	60202005
Riveting cylinder with connection block For RB 46-03	60202010

For RB 46-01

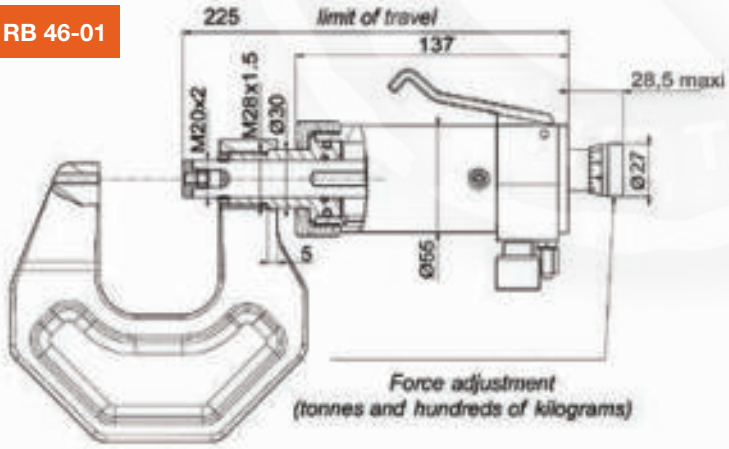

For RB 46-03

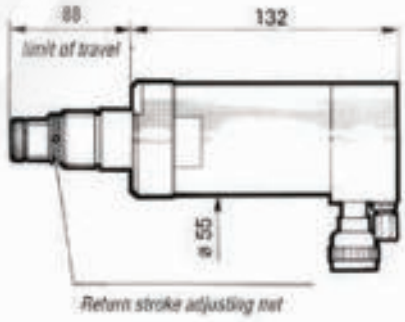

TECHNICAL DATA

Max. riveting dia. (depending on the rivet joint thickness):

Light alloy: 5/16 in - Ø 8 mm
Monel® metal: 1/4 in - Ø 6.35 mm
Titanium: 7/32 in - Ø 5.6 mm
Min. force: 0.4 t
Max. force: 7 t
Max. cylinder stroke: 2.00 in - 50 mm
Weight without Yoke: 2 kg / 4.4 lbs
Cycle time: 2.5 s*

*To set a light alloy rivet with a diameter of 4.8 mm with a no-load stroke of 10 mm / 0.39 in and a 1.80 m / 5.9 ft hydraulic hose.

Recoules Quackenbush®
Precision Drilling-Every Time

RIVETING CYLINDER

- For RB46-01, RB46-03

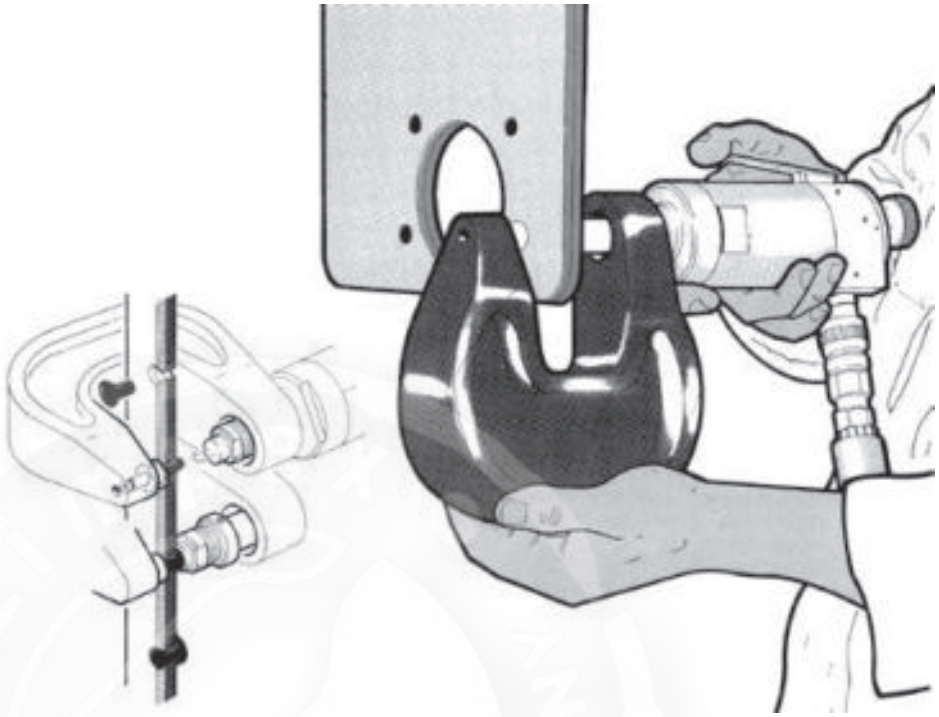

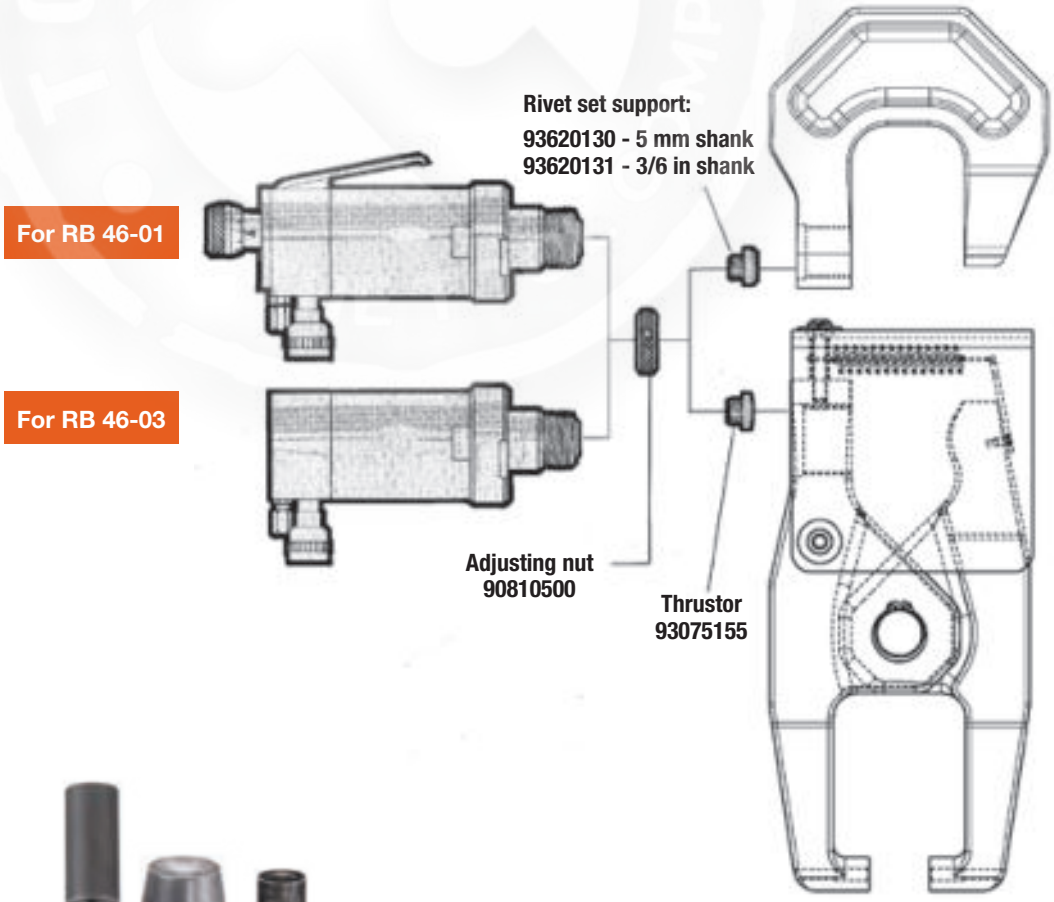

EXPERT ADVICE

- Refer to pg. 113 for rivet squeezer set selection (RB400, RB401, RB402).

Special c-yokes / alligator jaws on request.

Recoules Quackenbush®
Precision Drilling-Every Time

PRECISION MANUFACTURING

- RB 400 for countersink rivets
- RB 401 for universal head type rivets
- RB 402 for special reduced universal head rivets

ON REQUEST SQUEEZER SETS WITH 3/16 IN SHANK:

RB 400 Code number 60702...
RB 401 Code number 60712...
RB 402 Code number 60722...

RB 400

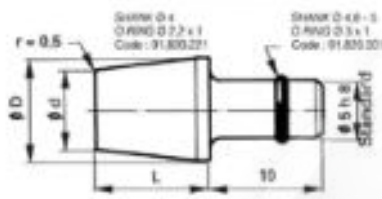

RIVET DIA		1.6 & 2.4	3.2 & 3.6	4	4.8	5.6 & 6.4
		1/16 in & 3/32 in	1/8 in & 9/64 in	5/32 in	3/16 in	7/32 in & 1/4 in
Ø	d	7	9	10	12	16
	D	9	9	14	14	16
L	4	60703005	60703205	60703405	60703505	60703605
	7	60703020	60703220	60703420	60703520	60703620
	10	60703040	60703240	60703440	60703540	60703640
	12.5	60703055	60703255	60703455	60703555	60703655
	16	60703075	60703275	60703475	60703575	60703675
	20	60703095	60703295	60703495	60703595	60703695

L	4	60701005	60701205	RB 40-13-30 Shank 4 dia only 0.1575 in
	7	60701020	60701220	

RB 401

NFL 21215
AN 470
LN 9198
NSA 5413

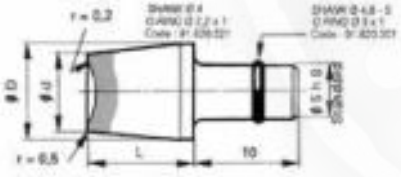

RIVET DIA		2.4	3.2	4	4.8	5.6	6.4
		3/32 in	1/8 in	5/32 in	3/16 in	7/32 in	1/4 in
Ø	d	7	9	10	12	14	16
	D	9	9	14	14	14	16
L	4	60713105	60713205	60713405	60713505	60713605	60713705
	7	60713120	60713220	60713420	60713520	60713620	60713720
	10	60713140	60713240	60713440	60713540	60713640	60713740
	12.5	60713155	60713255	60713455	60713555	60713655	60713755
	16	60713175	60713275	60713475	60713575	60713675	60713775
	20	60713195	60713295	60713495	60713595	60713695	60713795

L	4	60711105	60711205	RB 40-13-30 Shank 4 dia only 0.1575 in
	7	60711120	60711220	

RB 402

NSA 5411 - Titanium:
NSA 5415 - Monel® metal:
ASNA 2020

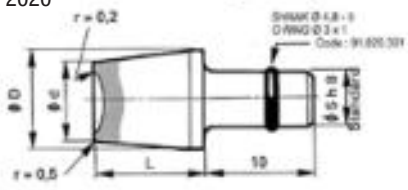

RIVET DIA		2.4	3.2	3.6	4	4.8	5.6
		3/32 in	1/8 in	9/64 in	5/32 in	3/16 in	7/32 in
Ø	d	7	9	9	10	12	14
	D	9	9	9	14	14	14
L	4	60723105	60723205	60723305	60723405	60723505	60723605
	7	60723120	60723220	60723320	60723420	60723520	60723620
	10	60723140	60723240	60723340	60723440	60723540	60723640
	12.5	60723155	60723255	60723355	60723455	60723555	60723655
	16	60723175	60723275	60723375	60723475	60723575	60723675
	20	60723195	60723295	60723395	60723495	60723595	60723695

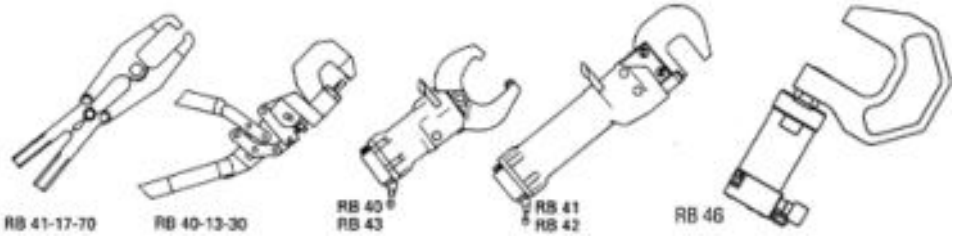

EXPERT ADVICE

- All of our rivet squeezer sets have been specially designed to use with our pneumatic or hydraulic tools.

Recoules Quackenbush
Precision Drilling-Every Time

PRECISION MANUFACTURING

- Use of this type of rivet set with a rubber guard prevents slipping and damage to skin surface.

DIA D		DIA A		DIA B	R	CODE NUMBER
mm	in	mm	in	mm		
10.2	0.401	18	0.700	24	12.7	60751100
10.2	0.401	31	1.22	40	12.7	60751150
10.2	0.401	25	0.984	33	12.7	03910638PT

REP	DIA D	DIA A	CODE NUMBER
01	9.9	18	93201000
01	9.9	31	93201050
01	10.2	18	93201100
01	10.2	31	93201150
01	12.7	18	93201200
01	12.7	31	93201250
02	-	18	90830001
02	-	31	90830002
03	-	18	93080001
03	-	31	93080002

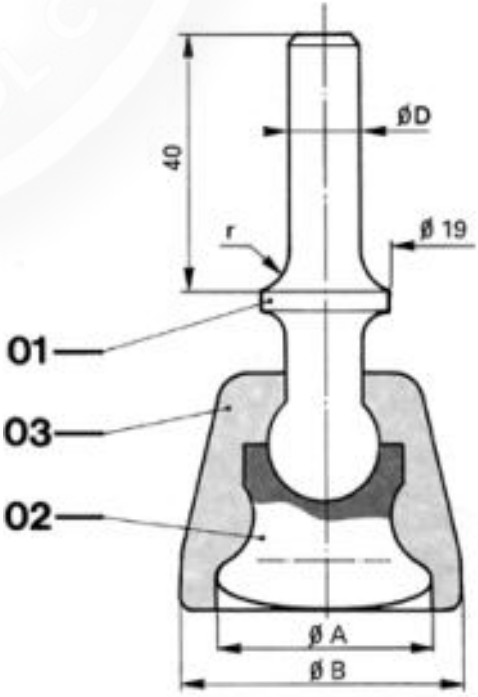

Different shank diameters are available.

Recoules Quackenbush®
Precision Drilling-Every Time

PRECISION MANUFACTURING

- This type of rivet set is particularly adapted for all riveting operations on thin sections.
- Quality of the working surface prevents damage to the skin.

DIA D		DIA A		DIA L		R	CODE NUMBER	
mm	in	mm	in	mm	in			
9.5	0.374	22	0.866	102	4.02	-	03911800PT	
10.2	0.401	21	0.827	48	1.89	-	03911374PT	Special shank length
10.2	0.401	22	0.866	65	2.56	-	03910900PT	
10.2	0.401	22	0.866	66	2.58	-	03911809PT	
10.2	0.401	22	0.866	109	4.27	-	03911810PT	
10.2	0.401	31	1.22	90	3.54	12.70	60771150	
10.2	0.401	31	1.22	150	5.90	12.70	60771155	
10.2	0.401	31	1.22	190	7.48	12.70	60771160	
12.7	0.498	21	0.827	48	1.89	-	03911360PT	Special shank length
12.7	0.498	35	1.38	55	2.17	-	03911361PT	Special shank length

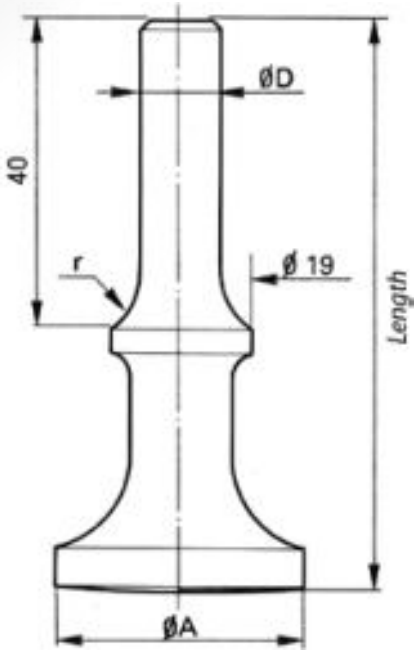

Different shank diameters are available.

Recoules Quackenbush®
Precision Drilling-Every Time

PRECISION MANUFACTURING

- Simple and handy, equipped with a flexible, highly-efficient safety locking device, this inspection tool is designed for checking all thicknesses form 0 to 1 1/4 in (30 mm).
- The accurate scale allows reading to 0.004 in (0.1 mm).

CODE NUMBER	60901000

EXPERT ADVICE

- Alternative thicknesses are available on request (example: 1.5 in / 40 mm, 4 1/2 in / 115 mm, 6 1/4 in / 160 mm, etc.
- On request, this tool is available in imperial measurement in graduation of 1/16 in.

HAND-RIVETING PLIERS

CODE NUMBER	60003000

RB 41-17-70

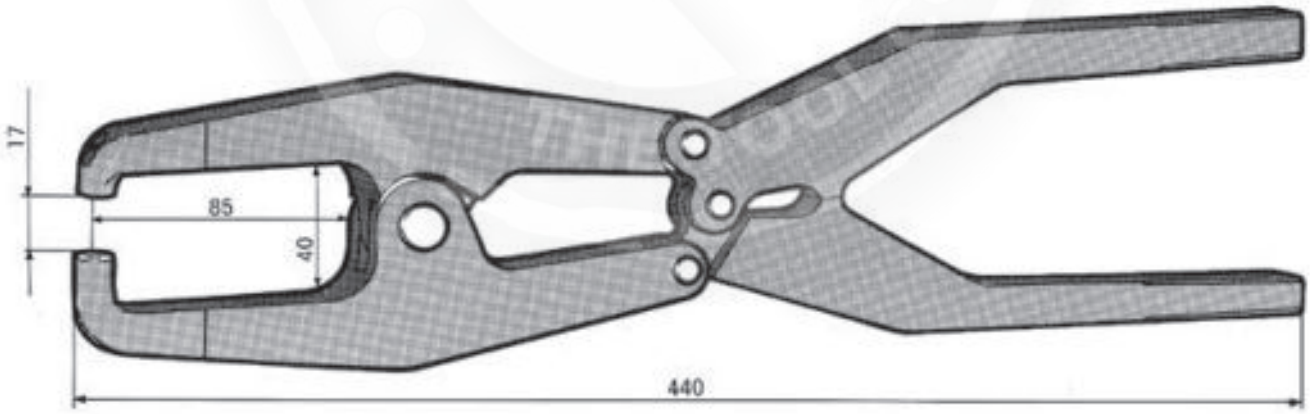

TECHNICAL DATA

Riveting aluminum rivets: 3/32 in dia - maxi Ø 2.4 mm
Weight: 1.750 kg
Depth: 3.35 in - 85 mm
To use with rivet squeezer set: 0.197 in dia shank - Ø 5 mm
Maxi opening: 1.57 in - 40 mm
Overall length: 17.32 in - 440 mm
This tool is supplied exclusive of the squeezer set

EXPERT ADVICE

- Refer to pg. 113 for rivet squeezer set selection (RB400, RB401, RB402).

Recoules Quackenbush®
Precision Drilling-Every Time

ADVANTAGES

- Simple and sturdy, equipped with an interchangeable swivel yoke. These pliers have been designed to squeeze aluminum rivets up to capacity 1/8 in dia (Ø 3.2 mm).
- Compact with a 0.63 in (16 mm) opening and a depth of 1.18 in (30 mm), the standard yoke is toughened steel. The pliers setting is achieved by simple adjustment of the snap-holder.
- All special yokes are supplied on request. Simply specify the yoke opening and depth when ordering.
- On request only, this hand riveting plier can be made with bended handles (60002305).

CODE NUMBER (STD C-YOKE 1 1/4 in x 1 1/4 in)	60002005

TECHNICAL DATA

Riveting aluminum rivets: 1/8 in dia - maxi Ø 3.2 mm
Weight: 1.350 kg
Depth: 1.18 in - 30 mm
To use with rivet squeezer set: 5/32 in dia shank - Ø 4 mm
Yoke opening: 0.63 in - 16 mm
Overall length: 16.53 in - 420 mm
This tool is supplied exclusive of the squeezer set

EXPERT ADVICE

- Refer to pg. 113 for rivet squeezer set selection (RB400, RB401, RB402).

Recoules Quackenbush®
Precision Drilling-Every Time

PRECISION MANUFACTURING

- This very simple hand cutting tool includes a microstop adjustment for a clean, precise cut of all aluminum rivets from: 1/16 in to 7/32 in dia.

REFERENCE	RIVET DIA.	CODE NUMBER
RB 2015	2, 2.5, 3, 3.5, 4, 5, 6	60001000
RBI 2015	1/16 in, 3/32 in 1/8 in, 9/64 in 5/32 in, 3/16 in, 7/32 in	RC-60001005

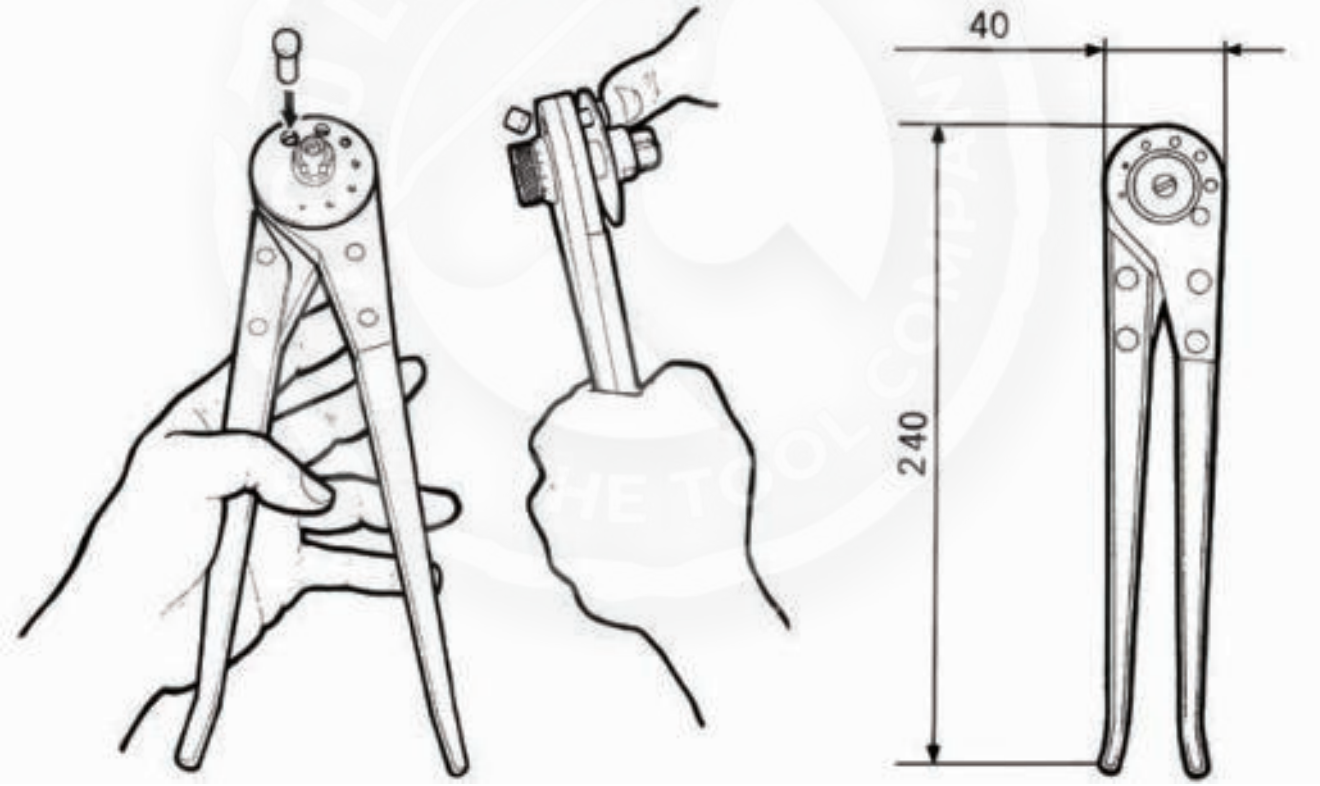

TECHNICAL DATA

Minimum underhead cutting length: 0.197 in dia - 5 mm
Tolerance over length: 0.002 in dia - 0.5 mm

EXPERT ADVICE

- This tool is also very useful for aircraft maintenance technicians.

Recoules Quackenbush®
Precision Drilling-Every Time

ADVANTAGES

- Simple, rugged, and handy, this tool has been designed to afford the easy removal of rivet rings (Huck, LGP type or others) without risk of damage to the hole or skin.
- Strong mechanical leverage enables clean removal of rings into two half shells.
- Quick change levers enable the ring cutter to be used in either inline or right angle position.
- Reduced dimension of the working part.
- No adjustment or setting required for use which is a considerable time-saver for rivet ring removal.
- Removable, quick-change anvils.
- Each tool is supplied with 1 set of anvils for one rivet ring diameter.

FASTENERS DIAMETER		CODE NUMBER
mm	in	
4.00	0.1579	60004000
4.16	0.1638	60004017
4.80	3/16	60004001
5.00	0.1969	60004005
5.60	7/32	60004008
6.00	0.2362	60004010
6.35	1/4	60004016
7.94	5/16	60004015

REFERENCE SPARE PARTS (METRIC)	INDEX	QTY	DESCRIPTION
90510005	1	1	Body for dia 4 mm
90510010	1	1	Body for dia 5 mm
90510015	1	1	Body for dia 6 mm
90520010	2	1	Fixed anvils
91217225	3	2	Pins
93430075	4	1	Spring
90520005	5	1	Pivoting anvil
90030005	6	1	Axis
93060010	7	1	Mobile lever
93060005	8	1	Fixed lever
60004501	9	3	Axis

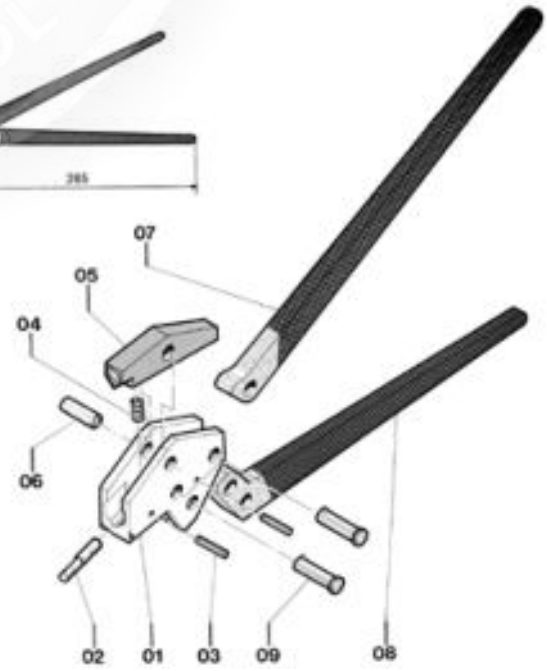

Ordering information: please indicate code number.
Spare parts for alternative diameters on request only.

Recoules Quackenbush®
Precision Drilling-Every Time

F-SERIES - ROUND TAPER NOSE RIVETER

- For driving 1/8 in - 1/4 in (3 - 6 mm) rivets.
- Standard beehive retainer.
- Built-in air regulator controls power output.
- Spool valve for precise speed control.

CAT. NO.	BORE	ABRASIVE CAPACITY	STROKE	TYPE HOUSING	BLOWS PER MINUTE	WEIGHT	LENGTH	AIR INLET SIZE
F4-PT-RT-B	0.56 in	0.401 Rivet Set Shank Diameter	4.0 in	Aluminum	1.700	3.3 lb / 1.50 kg	8.7 in / 221 mm	1/4 in

All tools performance rated @ 90psi / 620 kPa air pressure.
Minimum Hose I.D.: 1/4in / 6.4mm
Standard Equipment: Operating instructions & service manual

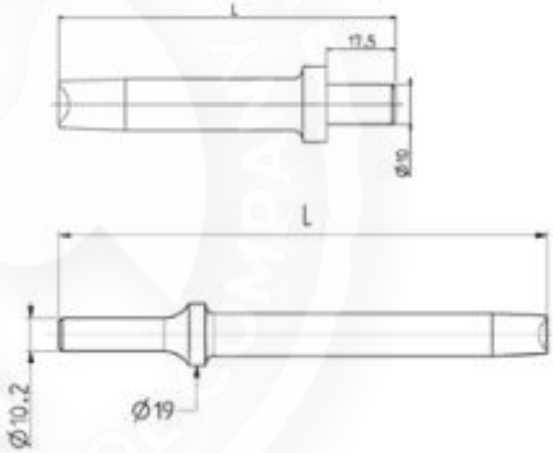

RIVET DIAMETER		2.4 mm 3/32 in	3.2 mm 1/8 in	4 mm 5/32 in	4.8 mm 3/16 in	2.4 mm - 5.6 mm 3/32 in - 7/32 in	6.35 mm - 9.52 mm 1/4 in - 3/8 in
FOR UNIVERSAL HEAD RIVET TYPE L21215B							
L	33	03910226PT	03910227PT	03910228PT	–	–	–
	60	–	03912760PT	03912769PT	–	–	–
	90	–	03912761PT	–	–	–	–
	120	–	03912762PT	–	–	–	–
FOR UNIVERSAL HEAD RIVET TYPE AN470							
L	60	–	–	60802143	60802144	–	–
	90	60802241	60802242	60802243	60802244	–	–
	150	–	–	60802343	60802344	–	–
FOR FLUSH HEAD RIVET TYPE							
L	150	–	–	–	–	60802311	60802316

EXPERT ADVICE

- We manufacture all type of rivets applicable to all current norms.
  We can manufacture a rivet squeezer set from your rivet.

Alternative short shank rivet set may be manufactured by request with special lengths.

RB 6081	RB 6082	RB 6083	RB 6084	RB 6085

Made from alloy steel forged blanks limiting the risk of bursting, our standard snaps are available in different types, lengths and diameters of attachments.

* On request only.

* Other prints on request.

	SPECIFICATION	Ø ATTACHEMENT			TOTAL LENGTH						RIVET SQUEEZER TYPE					Ø RIVET SQUEEZER									
											FLUSH HEAD														
												UNIVERSAL HEAD				2,4 ↓ 5,60	6,35 ↓ 9,52	UNIVERSAL HEAD							
		r 3	r 10,2	r 12,7																					
	mm	9,9	10,2	12,7	60	90	150	190	340	250		AN 430	AN 455	AN 470	ASNA 2020			2,4	3,2	4	4,8	5,6	6,35	7,94	9,52
	inch	.390	.401	.498	2"1/2	3"1/2	6"	7"1/2	13"1/2	9"5/6						3/32 ↓ 7/32	1/4 ↓ 3/8	3/32"	1/8"	5/32"	3/16"	7/32"	1/4"	5/16"	3/8"
CODIFICATION	BASIC PART NUMBER	1	2	3	1	2	3	4	5	6	1	2	3	4	5	1	6	1	2	3	4	5	6	7	8
	6080	○	●	○	●	●	●	●	○	●	●	○	○	●	●	●	●	●	●	●	●	○	●		
	6081	○	●	○		●	●	●	○	●	●	○	○	●	●	●	●	●	●	●	●	○	●		
	6082		○	○		○		○		○	○	○	○	○	○		○							○	○
	*6083		○	○		○		○		○	○	○	○	○	○		○							○	○
	*6084	○	●	○				●		○	●	○	○	●	●	●		●	●	●	●	○			
	*6085	○	●	○			●				●	○	○	●	●	●		●	●	●	●	○			

● Standard
○ On request

608_ _ | _ | _ | _ | _

68_ _ _ _ _

NORMS			
	USA	GERMANY	FRANCE
Universal Head	AN 470	LN 9198	L 21215
Brazier Head	AN 455		L 21211
Reduced Universal Head			NSA 5411 Rivet Titanium Squeezer NSA 5415 Monel Rivet
Round Head	AN 430		

60 802 316 EXAMPLE : 6080 Straight type - Shank 0.401 in dia - Length 6 in
- For flush head rivets 1/4 in dia.

60 823 247 EXAMPLE : 6082 Straight type - Shank 0.498 in dia - Length 3 1/2 in
- For universal head AN 470 rivet 5/16 in dia.

Recoules Quackenbush®
Precision Drilling-Every Time

Cleco®
Innovation In
Assembly Productivity

14CF SERIES - RIVET SHAVER WITH STABILIZER

- Non-reversible
- Optional stabilizer attachment

CAT. NO.	FREE SPEED (RPM)	ABRASIVE CAPACITY	WEIGHT	LENGTH
14CFS60-95	29.000	0.0005 Cutter Adjustment	2.3 lb / 1.04 kg	8.2 in / 208 mm
14CFS60-98	29.000	0.00025 Cutter Adjustment	2.3 lb / 1.04 kg	8.2 in / 208 mm
14CNL60-95	20.000	0.0005 Cutter Adjustment	4.5 lb / 2.04 kg	8.9 in / 226 mm

All tools performance rated @ 90psi / 620 kPa air pressure.
Minimum Hose I.D.: 5/16in / 7.9mm
Standard Equipment: Stabilizer and choice of skirt

CUTTER DIAMETER in	CARBIDE CUTTER	PART NUMBER										
		SKIRTS		1 in EXTENDED SKIRT			4 in EXTENDED SKIRT			6 in EXTENDED SKIRT		
		Std.	Wide	Adapter	Skirt	Assembly	Adapter	Skirt	Assembly	Adapter	Skirt	Assembly
5/16	–	14-4391	14-4401	–	–	–	–	–	–	–	–	–
3/8	14-4382	14-4392	14-4402	–	–	14-4532	14-4302	14-4312	14-4512	–	14-4372	14-4572
7/16	14-4383	14-4393	14-4403	14-4323	–	14-4533	14-4303	–	14-4513	14-4363	14-4373	14-4573
1/2	14-4384	14-4394	14-4404	14-4324	14-4334	14-4534	–	–	14-4514	14-4364	14-4374	14-4574
9/16	14-4385	14-4395	14-4405	–	–	–	–	–	–	–	–	–
5/8	14-4386	14-4396	14-4406	–	–	–	14-4306	14-4316	14-4516	–	–	–
3/4	14-4387	14-4397	–	–	–	–	–	–	–	–	–	–
1	14-4422	14-4410	–	–	–	–	–	–	–	–	–	–
1-1/4	–	14-4412	–	–	–	–	–	–	–	–	–	–

Cleco®
Innovation In
Assembly Productivity

Pneumatic Assembly Tools - Inline | 19, 8, 88 Series ---------- 124

Pneumatic Assembly Tools - Right Angle | 19, 24, 34, 55, 75 Series --------- 125

Pneumatic Assembly Tools - Right Angle | 19, 24, 34 Series ---------- 126

Pneumatic Assembly Tools - Right Angle | 55, 75 Series ---------- 127

Pneumatic Assembly Tools - Pistol Grip | 19, 19 Stall, 88 Series ---------- 128

Pneumatic Assembly Tools | Pulse Nutrunners ---------- 130

DC Electric Global Controllers | mPro400GC, mPro400GC-SG ---------- 132

Cleco LiveWire™ DC Electric Cordless Tools | Right Angle ---------- 133

Cleco LiveWire™ DC Electric Cordless Tools | Pistol Grip ---------- 135

Cleco LiveWire™ DC Electric Cordless Tools | Tube Nut Series ---------- 136

Cleco LiveWire™ DC Electric Cordless Tools | Crowfoot Series ---------- 137

DC Electric Corded Transducer Control Tools - Right Angle | 18, 48 Series --- 138

DC Electric Corded Transducer Control Tools - Pistol Grip | 18, 48 Series ---- 139

DC Electric Corded Transducer Control Tools | Inline Non-Floating Spindle --- 140

Intelligent Spindles | Straight, Offset, Angle Drives ---------- 141

Pneumatic Assembly Tools - Attachments | Type 1, 2, 3, 4 ---------- 142

Pneumatic Assembly Tools | Frangible Collar Pistol Attachment ---------- 143

Pneumatic Assembly Tools - Attachments | Angle Offset, Standard ---------- 144

Pneumatic Assembly Tools | Torque Control Pistol Offset Attachment -------- 145

Pneumatic Assembly Tools | Frangible Collar Angle Attachment ---------- 146

Cleco®
Innovation In Assembly Productivity

19 SERIES

- Torque Range: 0.6 - 14.7 Nm / 5.0 - 130 in-lbs
- Push-to-start, push-and-lever start
- External torque adjustment
- Bit & finder, 1/4 in quick-change chuck

19SPA05Q

19SCA05Q

8 SERIES

- Torque Range: 1.7 - 8.5 Nm / 15.0 - 75 in-lbs
- Push button reverse, non-reversible
- Push-to-start, push-and-lever start
- Bit & finder, quick-change chuck

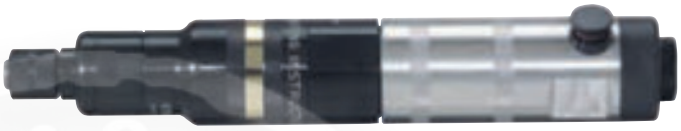

8RSA-10BQ

88 SERIES

- Torque Range: 1.7 - 19 Nm / 15.0 - 190 in-lbs
- Push button reverse, non-reversible
- Push-to-start, push-and-lever start
- Quick-change chuck, 3/8 in square drive

88RSA-5CQ

MODEL NUMBER		TORQUE RANGE				FREE SPEED	LENGTH*		WEIGHT		AIR CONSUMPTION		
		Tool Range		With Std. Spring							Air Inlet NPT	Min. Hose I.D.	SCFM
Bit & Finder*	1/4 in Quick Change	in-lbs	Nm	in-lbs	Nm	RPM	in	mm	lbs	kg			
PUSH-TO-START - PUSH BUTTON REVERSE													
	19BPA02Q	5 - 19	0.6 - 2.1	5 - 19	0.6 - 2.1	2300	9.1	230	1.4	0.63	1/8 in	3/16 in	11
	19BPA03Q	5 - 26	0.6 - 2.9	5 - 19	0.6 - 2.1	1600	9.3	235	1.4	0.64	1/8 in	3/16 in	11
	19BPA04Q	10 - 40	1.1 - 4.5	10 - 38	1.1 - 4.3	920	9.1	230	1.3	0.61	1/8 in	3/16 in	11
	19BPA05Q	10 - 45	1.1 - 5.1	10 - 38	1.1 - 4.3	560	9.5	240	1.5	0.67	1/8 in	3/16 in	11
	19BPA06Q	10 - 45	1.1 - 5.1	10 - 38	1.1 - 4.3	220	9.5	240	1.5	0.68	1/8 in	3/16 in	11
PUSH-TO-START - COLLAR REVERSE													
19SPA02B	19SPA02Q	5 - 19	0.6 - 2.1	5 - 19	0.6 - 2.1	2800	9.1	230	1.4	0.63	1/8 in	3/16 in	11
19SPA03B	19SPA03Q	5 - 26	0.6 - 2.9	5 - 19	0.6 - 2.1	1900	9.3	235	1.4	0.64	1/8 in	3/16 in	11
19SPA04B	19SPA04Q	10 - 40	1.1 - 4.5	10 - 38	1.1 - 4.3	1100	9.1	230	1.3	0.61	1/8 in	3/16 in	11
19SPA05B	19SPA05Q	10 - 45	1.1 - 5.1	10 - 38	1.1 - 4.3	660	9.5	240	1.5	0.67	1/8 in	3/16 in	11
19SPA06B	19SPA06Q	10 - 45	1.1 - 5.1	10 - 38	1.1 - 4.3	260	9.5	240	1.5	0.68	1/8 in	3/16 in	11
LEVER PUSH-TO-START - COLLAR REVERSE													
19SCA02B	19SCA02Q	5 - 19	0.6 - 2.1	5 - 19	0.6 - 2.1	2800	9.8	249	1.5	0.69	1/8 in	3/16 in	11
19SCA03B	19SCA03Q	5 - 26	0.6 - 2.9	5 - 19	0.6 - 2.1	1900	10.0	254	1.5	0.70	1/8 in	3/16 in	11
19SCA04B	19SCA04Q	10 - 40	1.1 - 4.5	10 - 38	1.1 - 4.3	1100	9.8	249	1.5	0.66	1/8 in	3/16 in	11
19SCA05B	19SCA05Q	10 - 45	1.1 - 5.1	10 - 38	1.1 - 4.3	660	10.2	259	1.6	0.73	1/8 in	3/16 in	11
19SCA06B	19SCA06Q	10 - 45	1.1 - 5.1	10 - 38	1.1 - 4.3	260	10.2	259	1.6	0.74	1/8 in	3/16 in	11

*Add 0.63 in (16 mm) for bit & finder models
** Short housing
General:
90 psi (620 kPa) required for maximum rated torque.

Standard Equipment:
Operating instructions & service manual.
Suspension bail.
All torque springs required to meet indicated torque.
Lever Push-to-Start models include kit to convert to lever only. (301409)

Additional accessories: bits & finders,
Non-Reverse Kit: 207030
Torque Signal Kit: 301106 (lever only)
Overhose: 207019

MODEL NUMBER			TORQUE RANGE		FREE SPEED	LENGTH*		WEIGHT		AIR CONSUMPTION		
Bit & Finder	1/4 in Hex Quick Change	3/8 in Square Drive	in-lbs	Nm	RPM	in	mm	lbs	kg	Air Inlet NPT	Min. Hose I.D.	SCFM
PUSH-TO-START - PUSH BUTTON REVERSE												
8RSA-10	8RSA-10BQ		15 - 65	1.7 - 7.3	800	9.6	260	2.4	1.1	1/4 in	1/4 in	19
	8RSA-7BQ		15 - 75	1.7 - 8.5	550	9.6	260	2.4	1.1	1/4 in	1/4 in	19
	8RSA-5BQ		15 - 75	1.7 - 8.5	400	9.6	260	2.4	1.1	1/4 in	1/4 in	19
	88RSA-7CQ	88RSA-7C-3	15 - 95	1.7 - 10	550	9.5	241	2.6	1.2	1/4 in	1/4 in	19
	88RSA-5CQ	88RSA-5C-3	15 - 160	1.7 - 18	400	9.5	241	2.6	1.2	1/4 in	1/4 in	19
PUSH AND LEVER START - PUSH BUTTON REVERSE												
	8RSAL-10BQ		15 - 60	1.7 - 6.8	800	11.3	302	2.9	1.3	1/4 in	1/4 in	19
	88RSAL-5CQ	88RSAL-5C-3	15 - 160	1.7 - 18	400	11.1	282	3.1	1.4	1/4 in	1/4 in	19

*Add 0.63 in (16 mm) for bit & finder models
General:
90 psi (620 kPa) required for maximum rated torque.
Length and weight of finder type tools includes standard length bit & finder. Weight does not include dead handle.

Standard Equipment:
Operating instructions & service manual
Suspension bail
Dead handle on models above 100 in-lbs torque cap.
All torque springs required to meet indicated torque

Standard Equipment if Specified:
One bit, finder, and finder spring (bit & finder models)
Grip Sleeve (202346; Push-to-Start models only)
Dead handle (861006)

Cleco®
Innovation In Assembly Productivity

19 SERIES

- Torque Range: 0.5 - 11 Nm / 4.0 - 100 in-lbs
- Class-leading accuracy and repeatability
- External torque adjustment
- Sliding knob reverse
- 1/4 in and 3/8 in square drive

19RAA07AH2

24RAA11AL3

24 SERIES

- Torque Range: 4.0 - 23 Nm / 3.0 - 17 ft-lbs
- External torque adjustment
- 3/8 in square drive
- Indexable angle-head
- One torque spring to meet specified torque
- Oil-less blades

34RAA33AX3

55RNAL-3T-4

34 SERIES

- Torque Range: 8.0 - 75 Nm / 4.0 - 55 ft-lbs
- External torque adjustment
- 3/8 in and 1/2 in square drive
- Indexable angle-head
- One torque spring to meet specified torque
- Oil-less blades

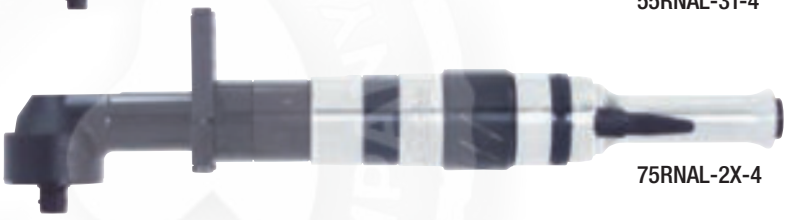
75RNAL-2X-4

55 SERIES

- Torque Range: 32 - 176 Nm / 24 - 130 ft-lbs
- External torque adjustment
- 1/2 in square drive
- Reversible and non-reversible
- Lever start
- Rotating exhaust deflector

75 SERIES

- Torque Range: 95 - 430 Nm / 70 - 320 ft-lbs
- External torque adjustment
- 1/2 in and 3/4 in square drive
- Reversible and non-reversible
- External torque adjustment
- Lever start

19 | 24 | 34 MODEL NUMBER EXAMPLE

24 R A S 23 A M 3

- **24** – Series: 19. 24. 34
- **R** – Rotation: R – Reversible
- **A** – Tool Style: A – Right Angle
- **S** – Torque Control: A – Clecomatic; S – Stall
- **23** – Maximum Torque Nm (Rounded to the nearest Nm)
- **A** – Tool Termination: A – Angle head
- **M** – Angle Head Size: L – Light Duty; M – Medium Duty; H – Heavy Duty; X – Extra Heavy Duty; Z – Super Heavy Duty
- **3** – Square Drive: 2 – 1/4 in (AL only); 3 – 3/8 in; 4 – 1/2 in (AZ only)

55 | 75 MODEL NUMBER EXAMPLE

55 R N A L - XX X - X

- **55** – Series: 55. 75
- **R** – Rotation: N-Non Reversible; R-Reversible
- **N** – Nutrunner
- **A** – Torque Control: A – Clecomatic; – – Stall
- **L** – Start Type: L – Lever; B – Button
- **XX** – Gear Train: 2. 3. 4. 6. 7. 10
- **X** – Angle Head: P. T. V. X
- **X** – Sq. Drive: 3 – 3/8 in; 4 – 1/2 in; 6 – 3/4 in

Cleco®
Innovation In Assembly Productivity

MODEL NUMBER		TORQUE RANGE*				FREE SPEED	LENGTH		WEIGHT		HEAD HEIGHT		SIDE TO CENTER		AIR CONSUMPTION		
		Tool Range		With Std. Spring											Air Inlet NPT	Min. Hose I.D.	SCFM
1/4 in Sq. Dr.	3/8 in Sq. Dr.	in-lbs	Nm	in-lbs	Nm	RPM	in	mm	lbs	kg	in	mm	in	mm			
19 SERIES - REVERSIBLE – CLECOMATIC CLUTCH																	
19RAA02AM2		5 - 19	0.6 - 2.1	5 - 19	0.6 - 2.1	2400	11.9	303	1.7	0.8	1.06	27	0.36	9	1/8 in	3/16 in	11
19RAA02AH2	19RAA02AH3	6 - 21	0.7 - 2.4	6 - 21	0.7 - 2.4	2100	12.5	316	1.8	0.8	1.19	30	0.50	13	1/8 in	3/16 in	11
19RAA03AM2		5 - 27	0.6 - 3.1	5 - 21	0.6 - 2.4	1650	12.2	310	1.8	0.8	1.06	27	0.36	9	1/8 in	3/16 in	11
19RAA03AH2	19RAA03AH3	6 - 30	0.7 - 3.4	6 - 24	0.7 - 2.7	1450	12.7	321	1.8	0.8	1.19	30	0.50	13	1/8 in	3/16 in	11
19RAA04AM2		12 - 42	1.4 - 4.7	12 - 42	1.4 - 4.7	950	12.0	305	1.7	0.8	1.06	27	0.36	9	1/8 in	3/16 in	11
19RAA05AM2		12 - 50	1.4 - 5.7	12 - 42	1.4 - 4.7	570	12.4	316	1.8	0.8	1.06	27	0.36	9	1/8 in	3/16 in	11
19RAA06AH2*	19RAA06AH3	13 - 53	1.5 - 6.0	13 - 48	1.5 - 5.4	850	12.5	316	1.8	0.8	1.19	30	0.50	13	1/8 in	3/16 in	11
19RAA07AH2*	19RAA07AH3	13 - 60	1.5 - 6.8	13 - 48	1.5 - 5.4	500	12.9	326	1.9	0.9	1.19	30	0.50	13	1/8 in	3/16 in	11
19RAA09AH2*	19RAA09AH3	18 - 75	2.0 - 8.5	30 - 75	3.4 - 8.5	500	12.9	326	1.9	0.9	1.19	30	0.50	13	1/8 in	3/16 in	11
19RAA11AH2*	19RAA11AH3	18 - 100	2.0 - 11.3	30 - 100	3.4 - 11.3	340	12.3	312	2.1	1.0	1.19	30	0.50	13	1/8 in	3/16 in	11
19RAA12AH2*	19RAA12AH3	18 - 100	2.0 - 11.3	30 - 100	3.4 - 11.3	200	12.9	326	1.9	0.9	1.19	30	0.50	13	1/8 in	3/16 in	11

*Applications greater than 50 in-lbs may affect spindle/drive durability

General:
Tool performance rated at 90 psi (620 kPa) air pressure

Standard Equipment:
Operating instructions & service manual
Suspension bail.
All torque springs required to meet indicated torque specification

Optional Equipment:
Non-Reverse Kit: 207030
Torque Signal Kit: 301106 (Clecomatic clutch only)
Overhose: 207019
Quick Change and 1/4 in magnetic hex outputs available on AH3 models only
Quick Change: Change AH3 to AHQ
1/4 in Magnetic Hex: Change AH3 to AHM

MODEL NUMBER		TORQUE RANGE		FREE SPEED	LENGTH		WEIGHT		HEAD HEIGHT		SIDE TO CENTER		AIR CONSUMPTION		
3/8 in Sq. Dr.	1/2 in Sq. Dr.	ft-lbs	Nm	RPM	in	mm	lbs	kg	in	mm	in	mm	Air Inlet NPT	Min. Hose I.D.	SCFM
24 SERIES – REVERSIBLE – CLECOMATIC CLUTCH															
24RAA06AL3		3-4	4-5.5	2200	14.1	358	2.6	1.2	1.08	27.5	0.47	12.0	3/8 in	5/16 in	24
24RAA07AL3		3-5	5-7	1770	14.1	358	2.6	1.2	1.08	27.5	0.47	12.0	3/8 in	5/16 in	24
24RAA11AL3		5-8	7-11	1260	14.1	358	2.6	1.2	1.08	27.5	0.47	12.0	3/8 in	5/16 in	24
24RAA12AM3		5-9	6-12	1200	14.2	360	2.8	1.3	1.16	29.5	0.52	13.2	3/8 in	5/16 in	24
24RAA19AM3		7-14	10-19	700	15.0	380	3.2	1.4	1.16	29.5	0.52	13.2	3/8 in	5/16 in	24
24RAA23AM3		9-17	12-23	600	15.0	380	3.2	1.4	1.16	29.5	0.52	13.2	3/8 in	5/16 in	24
34 SERIES – REVERSIBLE – CLECOMATIC CLUTCH															
34RAA08AL3		4-6	8-5	2060	14.5	368	2.7	1.2	1.08	27.5	0.47	12.0	3/8 in	5/16 in	34
34RAA11AL3		5-8	7-11	1675	14.5	368	2.7	1.2	1.08	27.5	0.47	12.0	3/8 in	5/16 in	34
34RAA15AM3		7-11	9-15	1185	14.6	370	2.9	1.3	1.16	29.5	0.52	13.2	3/8 in	5/16 in	34
34RAA26AH3		10-19	13-26	710	15.4	390	3.2	1.5	1.22	31.0	0.57	14.4	3/8 in	5/16 in	34
34RAA28AH3		10-20	14-28	580	15.4	390	3.3	1.5	1.22	31.0	0.57	14.4	3/8 in	5/16 in	34
34RAA33AX3		12-24	17-33	545	15.5	393	3.5	1.6	1.36	34.5	0.67	17.1	3/8 in	5/16 in	34
34RAA37AX3		14-27	18-37	480	15.6	397	3.4	1.5	1.36	34.5	0.67	17.1	3/8 in	5/16 in	34
34RAA47AX3		17-35	24-47	385	15.6	397	3.4	1.5	1.36	34.5	0.67	17.1	3/8 in	5/16 in	34
34RAA68AZ3	34RAA68AZ4	25-50	34-68	255	16.2	411	3.7	1.7	1.60	41.0	0.70	18.0	3/8 in	5/16 in	34
34RAA75AZ3	34RAA75AZ4	28-55	38-75	155	17.0	431	3.9	1.8	1.60	41.0	0.70	18.0	3/8 in	5/16 in	34

General:
Tool performance rated at 90 psi (620 kPa) air pressure.

Standard Equipment:
Operating instructions & service manual
Suspension bail
Clutch adjustment tool

Optional Equipment:
Assembly wrench: 201898
Torque signal kit: 301937PT
Non-reversible kit: 204999
Exhaust Overhose: 204978

Cleco®
Innovation In Assembly Productivity

Model Number	Max. Torque		Square Drive	Free Speed	Length		Weight		Head Height		Side to Center		Air Consumption		
	ft-lbs	Nm	in	RPM	in	mm	lbs	kg	in	mm	in	mm	Air Inlet NPT	Min. Hose I.D.	SCFM
19 SERIES – REVERSIBLE – STALL															
19RAS03AM2	2.3	3.2	1/4	1700	11.4	290	1.3	0.6	1.06	27	0.36	9	1/8 in	3/16 in	11
19RAS04AH2	2.6*	3.6*	1/4	1500	11.2	284	1.4	0.6	1.19	30	0.5	13	1/8 in	3/16 in	11
19RAS05AM2	3.8	5.2	1/4	850	10.6	269	1.2	0.5	1.06	27	0.36	9	1/8 in	3/16 in	11
19RAS06AH3	4.6	6.2	3/8	880	11.0	279	1.3	0.6	1.19	30	0.5	13	1/8 in	3/16 in	11
24, 34 SERIES – REVERSIBLE – STALL															
34RAS11AL3	8.1	11	3/8	1675	12.0	305	2.1	1.0	1.1	28	0.5	12	3/8 in	5/16 in	34
24RAS13AM3	9.6	13	3/8	1200	11.7	297	2.2	1.0	1.2	30	0.5	13	3/8 in	5/16 in	24
34RAS28AH3	20	28	3/8	710	12.9	328	2.6	1.2	1.2	31	0.6	14	3/8 in	5/16 in	34
34RAS36AX3	26	36	3/8	545	13.0	330	2.8	1.3	1.4	35	0.7	17	3/8 in	5/16 in	34

* Maximum torque of tool exceeds the maximum torque rating for the head. increased maintenance should be expected when operated at the upper torque capacity range.

General:
Tool performance rated at 90 psi (620 kPa) air pressure.

Standard Equipment:
Operating instructions & service manual
Suspension bail (19 series)
Torque reaction mounting plate (75 series)

Optional Equipment:
19 Series: Non-Reverse Kit: 207030
Overhose: 207019
Quick Change and 1/4 in magnetic hex outputs available on AH3 models only.
Quick Change: Change AH3 to AHQ
1/4 in Magnetic Hex: Change AH3 to AHM
24/34 Series: Assembly wrench: 201898
Non-reverse kit: 204999

Model Number		Torque Range		Free Speed	Length		Weight		Head Height		Side to Center		Angle Head	Air Consumption		
1/2 in Sq. Dr.	3/4 in Sq. Dr.	ft-lbs	Nm	RPM	in	mm	lbs	kg	in	mm	in	mm		Air Inlet NPT	Min. Hose I.D.	SCFM
55 & 75 SERIES – LEVER START – REVERSIBLE																
55RNAL-6T-4		24 - 48	32 - 65	370	19.3	489	7.8	3.5	2.0	50	0.9	22	T	1/2 in	1/2 in	55
55RNAL-4P-4		26 - 54	35 - 73	330	19.1	486	7.4	3.3	1.6	41	0.7	18	P	1/2 in	1/2 in	55
55RNAL-4T-4		29 - 64	39 - 87	280	19.3	489	7.8	3.5	2.0	50	0.9	22	T	1/2 in	1/2 in	55
55RNAL-3P-4		36 - 80*	49 - 109*	220	19.1	486	7.4	3.3	1.6	41	0.7	18	P	1/2 in	1/2 in	55
55RNAL-3T-4		43 - 95	58 - 129	190	19.3	489	7.8	3.5	2.0	50	0.9	22	T	1/2 in	1/2 in	55
55RNAL-2T-4		50 - 125*	81 - 170*	140	19.3	489	7.8	3.5	2.0	50	0.9	22	T	1/2 in	1/2 in	55
75RNAL-3V-4		70 - 140	95 - 190	175	21.9	556	13.3	6.0	2.5	64	1.1	28	V	1/2 in	1/2 in	70
75RNAL-2V-4		90 - 190*	122 - 255*	130	21.9	556	13.3	6.0	2.5	64	1.1	28	V	1/2 in	1/2 in	70
	75RNAL-3X-6	110 - 225	150 - 305	110	22.6	575	15.0	6.8	2.8	70	1.4	37	X	1/2 in	1/2 in	70
	75RNAL-2X-6	150 - 305	203 - 410	80	22.6	575	15.0	6.8	2.8	70	1.4	37	X	1/2 in	1/2 in	70

* Maximum torque of tool exceeds the maximum torque rating for the head, high maintenance should be expected when operated at the upper torque capacity range.

General:
Tool performance rated at 90 psi (620 kPa) air pressure.

Standard Equipment:
Operating instructions & service manual
Torque Reaction Mounting Plate (75 series)
All torque springs required to meet indicated torque

Cleco®
Innovation In
Assembly Productivity

19 SERIES

- Torque Range: 0.6 - 14.7 Nm / 5.0 - 130 in-lbs
- Class-leading accuracy and repeatability
- Adjustable reverse lever for true one-handed operation
- 1/4 in hex quick change drive
- "P" and "T" style handles
- 2 interchangeable soft-touch grip sizes
- Streamlined torque signal ports
- Trigger-and-push, trigger-start

19PTA05Q
"P" Handle

19TTA02Q
"T" Handle with Top Air Option

19 SERIES STALL

- Torque Range: 2.1 - 7.9 Nm / 19 - 70 in-lbs
- 1/4 in hex quick change drive
- Trigger start
- "P" and "T" style handles
- 2 interchangeable soft-touch grip sizes
- Adjustable reverse lever for true one-handed operation
- Sliding knob or push-button reverse

19PTSO5Q

19TTSO2Q

88 SERIES

- Torque Range: 1.7 - 20 Nm / 15 - 180 in-lbs
- Quick change and square drive
- Reversible
- Trigger-and-push, trigger-start

88RSAPT-5C-3

Cleco®
Innovation In Assembly Productivity

MODEL NUMBER		TOOL TORQUE RANGE		MAXIMUM FREE SPEED	19P SERIES				19T SERIES			
					LENGTH		WEIGHT		LENGTH		WEIGHT	
P-Handle Pistol	T-Handle Pistol with Top Air Option	in-lb	Nm	rpm	in	mm	lbs	kg	in	mm	lbs	kg
PUSH & TRIGGER START												
19PCA02Q	19TCA02Q	3 - 19	0.3 - 2.1	2800	8.1	206	1.4	0.6	8.2	208	1.4	0.6
19PCA03Q	19TCA03Q	3 - 26	0.3 - 2.9	1900	8.3	211	1.5	0.7	8.4	212	1.5	0.7
19PCA04Q	19TCA04Q	3 - 40	0.3 - 4.5	1100	8.1	206	1.4	0.6	8.2	208	1.5	0.7
19PCA05Q	19TCA05Q	3 - 45	0.3 - 5.1	660	8.5	216	1.5	0.7	8.6	218	1.5	0.7
19PCA06Q	19TCA06Q	3 - 45	0.3 - 5.1	260	8.5	216	1.5	0.7	8.6	218	1.5	0.7
19PCA07Q	19TCA07Q	18 - 60	2.0 - 6.8	660	8.5	216	1.5	0.7	8.6	218	1.5	0.7
19PCA09Q	19TCA09Q	18 - 79	2.0 - 8.9	470	9.8	248	1.7	0.7	9.8	249	1.7	0.8
TRIGGER START												
19PTA02Q	19TTA02Q	3 - 19	0.3 - 2.1	2800	8.1	206	1.4	0.6	8.2	208	1.4	0.6
19PTA03Q	19TTA03Q	3 - 26	0.3 - 2.9	1900	8.3	211	1.5	0.7	8.4	212	1.5	0.7
19PTA04Q	19TTA04Q	3 - 40	0.3 - 4.5	1100	8.1	206	1.4	0.6	8.2	208	1.5	0.7
19PTA05Q	19TTA05Q	3 - 45	0.3 - 5.1	660	8.5	216	1.5	0.7	8.6	218	1.5	0.7
19PTA06Q	19TTA06Q	3 - 45	0.3 - 5.1	260	8.5	216	1.5	0.7	8.6	218	1.5	0.7
19PTA07Q	19TTA07Q	18 - 60	2.0 - 6.8	660	8.5	216	1.5	0.7	8.6	218	1.5	0.7
19PTA09Q	19TTA09Q	18 - 79	2.0 - 8.9	470	9.8	248	1.7	0.7	9.8	249	1.7	0.8
19PTA15Q	19TTA15Q	40 - 140	4.5 - 15.8	260	9.7	246	1.9	0.9	9.8	248	1.9	0.9
STALL					in	mm	lbs	kg	in	mm	lbs	kg
19PTS02Q	19TTS02Q	19	2.1	2800	5.9	150	1.2	0.5	5.8	146	1.2	0.5
19PTS03Q	19TTS03Q	26	2.9	1900	6.1	155	1.2	0.5	6.1	154	1.2	0.5
19PTS04Q	19TTS04Q	40	4.5	1100	5.9	150	1.2	0.5	5.8	146	1.2	0.5
19PTS05Q	19TTS05Q	45	5.1	660	6.1	155	1.2	0.5	6.1	154	1.2	0.5

All pistol tools have 1/4 in NPT inlet with minimum hose ID recommended at 3/8 in (10 mm).
Air consumption of pistol tools rated at 11 SCFM.

All performance specifications measured at 90 PSI (6.2 Bar).
Includes all springs needed for coverage of advertised torque range. Includes suspension bail.

MODEL NUMBER		TORQUE RANGE		FREE SPEED	LENGTH		WEIGHT		AIR CONSUMPTION		
1/4 in Hex Quick Change	3/8 in Square Drive	in-lbs	Nm	RPM	in	mm	lbs	kg	Air Inlet NPT	Min. Hose I.D.	SCFM
PUSH AND TRIGGER START - SLIDING KNOB REVERSE											
88RSAPT-7CQ		15 - 95	1.7 - 10	550	9.0	229	3.1	1.4	1/4 in	1/4 in	19
88RSAPT-5CQ	88RSAPT-5C-3	15 - 160	1.7 - 18	400	9.0	229	3.1	1.4	1/4 in	1/4 in	19
88RSAPT-2CQ		15 - 180	1.7 - 20	200	9.8	248	3.4	1.5	1/4 in	1/4 in	19
TRIGGER START - SLIDING KNOB REVERSE											
88RSATP-7CQ	88RSATP-7C-3	15 - 95	1.7 - 10	550	8.9	225	3.1	1.4	1/4 in	1/4 in	19
88RSATP-5CQ	88RSATP-5C-3	15 - 160	1.7 - 18	400	8.9	225	3.1	1.4	1/4 in	1/4 in	19
88RSATP-2CQ	88RSATP-2C-3	15 - 180	1.7 - 20	200	9.6	245	3.4	1.5	1/4 in	1/4 in	19

General:
Tool performance rated at 90 psi (620 kPa).
Weight does not include dead handle

Standard Equipment:
Operating instructions & service manual
Dead handle on all models above 100 in-lbs torque
All torque springs required to meet indicated torque

Standard Equipment if Specified:
Dead handle (861006)

Cleco®
Innovation In
Assembly Productivity

H-SERIES PTH

- Torque Range: 4 - 120 Nm / 3.0 - 88.8 ft-lbs
- Bolt Size: M5 - M12 / #10 - 1/2 in
- Inertia shut-off
- Motor governor equipped
- External torque adjustment
- External speed control
- Torque signal port
- Adjustable pulse unit volume simplifies maintenance
- Market-leading repeatability
- Reversible
- Oil-less blades

35PTHH403

C-SERIES PTHC & PTHFC

- Torque Range: 100 - 400 Nm / 74 - 295 ft-lbs
- Bolt Size: M12 - M20 / 1/2 in - 3/4 in
- Hydraulic pulse shut-off
- Motor governor equipped
- External torque adjustment
- External speed control
- Reversible
- Oil-less blades
- Torque signal port

140PTHC25Q

C-SERIES STHFC & STHF

- Torque Range: 2.6 - 35 Nm / 1.9 - 26 ft-lbs
- Bolt Size: M5 - M8 / #10 - 3/8 in
- Hydraulic pulse shut-off
- Motor governor equipped
- External torque adjustment
- External speed control
- Reversible
- Oil-less blades
- Torque signal port

15STH

H-SERIES PH NON-SHUT-OFF

- Torque Range: 4 - 120 Nm / 2.9 - 88.5 ft-lbs
- Bolt Size: M5 - M12 / #10 - 1/2 in
- External speed control
- Reversible
- Oil-less blades

55PHHA403

55PHH403

Cleco®
Innovation In Assembly Productivity

MODEL NUMBER	DRIVE TYPE	TORQUE RANGE		FREE SPEED	WEIGHT		AIR CONSUMPTION		
		ft-lbs	Nm	rpm	lbs	kg	NPT	Hose I.D.	SCFM
H-SERIES – PISTOL GRIP – SHUT-OFF MODELS									
7PTHH352	1/4 in Sq.Dr.	3.0 - 5.1	4 - 7	3500	1.74	0.79	1/4 in	3/8 in	7.06
7PTHH35Q	1/4 in QC	3.0 - 5.1	4 - 7	3500	1.74	0.79	1/4 in	3/8 in	7.06
11PTHH352	1/4 in Sq.Dr.	4.4 - 8.1	6 - 11	3500	1.81	0.82	1/4 in	3/8 in	7.06
11PTHH35Q	1/4 in QC	4.4 - 8.1	6 - 11	3500	1.87	0.85	1/4 in	3/8 in	7.06
11PTHH353*	3/8 in Sq.Dr.	4.4 - 8.1	6 - 11	3500	1.83	0.83	1/4 in	3/8 in	7.06
20PTHH40Q	1/4 in QC	7.4 - 14.7	10 - 20	4000	1.92	0.87	1/4 in	1/2 in	8.7
20PTHH403*	3/8 in Sq.Dr.	7.4 - 14.7	10 - 20	4000	1.90	0.86	1/4 in	1/2 in	8.7
35PTHH40Q	1/4 in QC	14.8 - 25.8	20 - 35	4000	2.31	1.05	1/4 in	1/2 in	15.9
35PTHH403*	3/8 in Sq.Dr.	14.8 - 25.8	20 - 35	4000	2.31	1.05	1/4 in	3/8 in	15.9
55PTHH403*	3/8 in Sq.Dr.	22.1 - 40.5	30 - 55	4000	2.54	1.15	1/4 in	3/8 in	15.9
80PTHH35Q	7/16 in QC	36.9 - 59.0	50 - 80	3500	3.20	1.45	1/4 in	3/8 in	19.4
80PTHH354	1/2 in Sq.Dr.	36.9 - 59.0	50 - 80	3500	3.10	1.40	1/4 in	3/8 in	19.4
110PTHH30Q	7/16 in QC	55.3 - 81.1	75 - 110	3000	3.75	1.70	3/8 in	1/2 in	19.4
120PTHH304	1/2 in Sq.Dr.	55.3 - 88.8	75 - 120	3000	3.75	1.70	3/8 in	1/2 in	19.4
C-SERIES – PISTOL GRIP – SHUT-OFF MODELS									
140PTHC25Q	7/16 in QC	74 - 103	100 - 140	2500	5.7	2.6	3/8 in	1/2 in	25.4
160PTHC256	3/4 in Sq.Dr.	74 - 118	100 - 160	2500	5.7	2.6	3/8 in	1/2 in	25.4
C-SERIES – PISTOL GRIP – SHUT-OFF MODELS – TRIGGER THROTTLE									
250PTHFC226	3/4 in Sq.Dr.	118 - 184	160 - 250	2200	8.8	4.0	3/8 in	1/2 in	33.5
400PTHFC206	3/4 in Sq.Dr.	185 - 295	250 - 400	2000	11.7	5.3	3/8 in	1/2 in	33.5
IN-LINE – PUSH-TO-START									
7STHFA55Q	1/4 in QC	1.9 - 4.9	2.6 - 6.6	5500	1.8	0.83	1/8 in		7.0
35STHFA40Q	7/16 in QC	12 - 26	15 - 35	4000	3.1	1.4	1/4 in	3/8 in	15.9
35STHFA404	1/2 in Sq.Dr.	12 - 26	15 - 35	4000	2.9	1.3	1/4 in	3/8 in	15.9
C-SERIES – IN-LINE – LEVER									
7STHFC55Q	1/4 in QC	1.9 - 4.9	2.6 - 6.6	5500	2.1	0.93	1/8 in		7.0
15STHFC40Q	1/4 in QC	3.6 - 11	5.0 - 15	4000	2.4	1.1	1/4 in	3/8 in	16.5
35STHFC40Q	7/16 in QC	12 - 26	15 - 35	4000	3.3	1.5	1/4 in	3/8 in	15.9
35STHFC404	1/2 in Sq.Dr.	12 - 26	15 - 35	4000	3.3	1.5	1/4 in	3/8 in	15.9
15STHC40Q	1/4 in QC	3.6 - 11	5.0 - 15	3000	2.4	1.1	1/4 in	3/8 in	16.5

PTHHA=Top Air Inlet
(*) 7/16 in Quick Change Chuck available separately as an accessory
General:
Tool performance rated @ 87 psi (6 bar) air pressure.

Standard Equipment:
Suspension bail and torque adjusting wrench.
Torque signal port (pistol grip models only)

MODEL NUMBER	DRIVE TYPE	TORQUE RANGE		FREE SPEED	WEIGHT		AIR CONSUMPTION		
		ft-lbs	Nm	rpm	lbs	kg	NPT	Hose I.D.	SCFM
H-SERIES – PISTOL GRIP – NON SHUT - OFF MODELS									
7PHH602	1/4 in Sq.Dr.	2.9 - 5.2	4 - 7	6000	1.70	0.77	1/4 in	3/8 in	8.7
7PHH60Q	1/4 in QC	2.9 - 5.2	4 - 7	6000	1.74	0.79	1/4 in	3/8 in	8.7
11PHH653*	3/8 in Sq.Dr.	4.4 - 8.1	6 - 11	6500	1.74	0.79	1/4 in	3/8 in	10.5
11PHH652	1/4 in Sq.Dr.	4.4 - 8.1	6 - 11	6500	1.72	0.78	1/4 in	3/8 in	10.5
11PHH65Q	1/4 in QC	4.4 - 8.1	6 - 11	6500	1.76	0.80	1/4 in	3/8 in	10.5
20PHH753*	3/8 in Sq.Dr.	7.4 - 14.7	10 - 20	7500	1.85	0.84	1/4 in	3/8 in	17.3
20PHH75Q	1/4 in QC	7.4 - 14.7	10 - 20	7500	1.90	0.86	1/4 in	3/8 in	17.3
35PHH653*	3/8 in Sq.Dr.	14.7 - 25.8	20 - 35	6500	2.25	1.02	1/4 in	3/8 in	19.4
35PHH65Q	1/4 in QC	14.7 - 25.8	20 - 35	6500	2.29	1.03	1/4 in	3/8 in	15.9
55PHH603*	3/8 in Sq.Dr.	22.1 - 40.5	30 - 55	6000	2.47	1.12	1/4 in	3/8 in	22.9
80PHH604	1/2 in Sq.Dr.	36.9 - 59.0	50 - 80	6000	3.09	1.40	1/4 in	3/8 in	26.5
80PHH60Q	7/16 in QC	36.9 - 59.0	50 - 80	6000	3.13	1.41	1/4 in	3/8 in	26.5
110PHH55Q	7/16 in QC	55.3 - 81.1	75 - 110	5500	3.68	1.66	3/8 in	1/2 in	30.0
120PHH554	1/2 in Sq.Dr.	55.3 - 88.5	75 - 120	5500	3.64	1.65	3/8 in	1/2 in	30.0
HIGH TORQUE PISTOL GRIP – NON - SHUT - OFF MODELS									
140PH45Q	7/16 in QC	74 - 103	100 - 140	4500	5.7	2.6	3/8 in	1/2 in	31.7
160PH456	3/4 in Sq.Dr.	74 - 118	100 - 160	4500	5.7	2.6	3/8 in	1/2 in	31.7
250PHF406	3/4 in Sq.Dr.	118 - 184	160 - 250	4000	8.6	3.9	3/8 in	1/2 in	40.6
400PHF356	3/4 in Sq.Dr.	184 - 295	250 - 400	3500	11.5	5.2	3/8 in	1/2 in	42.3

PTHHA=Top Air Inlet
*7/16 in Quick Change Chuck available separately as an accessory.
For 7 - 75 Series Models. small handle can be ordered by substituting "S" for "L" in model number.

General:
Tool performance rated @ 87 psi (6 bar) air pressure.

Standard Equipment:
Suspension bail and torque adjusting wrench.

Cleco®
Innovation In
Assembly Productivity

mPRO400GC GLOBAL CONTROLLER

- Graphics interface
- Fully programmable
- Local storage of 10000 cycles
- LAN capable
- Fieldbus options available

Master/Primary Unit

Secondary Unit

mPRO400GC-SG GLOBAL CONTROLLER

- Controller provides the same capabilities and functions as the mPro400GC-M controller with the added convenience of panel mount installation.

MPRO400GC-M

MPRO400GC-P

MPRO400GC-S

MODEL	DESCRIPTION	TOOL COMPATIBILITY	WEIGHT		WIDTH		HEIGHT		DEPTH	
			lbs	kg	in	mm	in	mm	in	mm
MPRO400GC-P	Primary	Cleco 18-48 Series, LiveWire, Intelligent Spindle*	30.7	13.9	10.3	261.62	14.9	378.46	12.9	327.66
MPRO400GC-S	Secondary	Cleco 18-48 Series	28.1	12.7	10.3	261.62	14.9	378.46	12.9	327.66
MPRO400GC-M	Master	LiveWire, Intelligent Spindle*	23.3	10.6	10.3	261.62	14.9	378.46	12.9	327.66
MPRO400GC-SG	Panel Mount	LiveWire, Intelligent Spindle, 1.2.3.4								

*Requires quote to accommodate hardware configurations.
Note: 17/47/67 and Matrix versions of the 18/48 series tools require Isolation Transformer 544185PT for use with Primary/Secondary controllers.
Panel Mount can be used in different cabinet solutions.

Cleco®
Innovation In Assembly Productivity

DESCRIPTION

- LiveWire Right Angle Series
- Torque Range: 5.5 - 90 Nm / 4.1 - 66.4 ft-lbs
- Bolt Size: M5 - M10 / #10 - 9/16 in
- Brushless precision motor
- High-resolution resolver
- Exact torque measurement by transducer
- Integrated electronic intelligence with power management and I/O signal processing
- Integrated servo

47BAYPB21P3

The Apex µ-Guard bit shown above is not included with the tool - order separately, see page 153.

RIGHT ANGLE NUTRUNNER NOMENCLATURE

47	B	A	X	X	B	XX	XXX	X

47 – Motor 47

B – Supply B - Batt./ PM48

A – Tool Version
A – Right angle

X – Data Transfer
Y – WLAN: Dual band 2.4 GHz. 5 GHz
Z – XBee: IEEE 802.15.4 (4 tools per access point)

X – Peripherals
S – Barcode scanner
– None
P – Expansion platform

B – Input Voltage
B – 26–48 V

XX – Max. Torque (Nm)
15 - 15 Nm
21 - 21 Nm
28 - 28 Nm
35 - 35 Nm
48 - 48 Nm
70 - 70 Nm
90 - 90 Nm

XXX – Output Drive Size
P3 – 3/8 in Sq. dr. spiral geared
P4 – 1/2 in Sq. dr. spiral geared

X – Output Drive Locking
– Pin locking
B – Ball locking

RIGHT ANGLE	TORQUE RANGE		FREE SPEED (RPM)			WEIGHT-LESS BATTERY		OUTPUT DRIVE SIZE	LENGTH WITH 26 V BATTERY	
Model Number	ft-lb	Nm	26 V	44 V	Vmax	lbs	kg		in	mm
47BAYPB15P3	4.1 - 11.1	5.5 - 15	485	890	890	4.9	2.20	3/8 in SQ	23.0	585
47BAYPB21P3	5.9 - 15.5	8 - 21	370	680	680	4.9	2.20	3/8 in SQ	23.0	585
47BAYPB28P3	7.4 - 20.7	10 - 28	260	480	480	4.9	2.20	3/8 in SQ	23.0	585
47BAYPB35P3	8.9 - 25.8	12 - 35	255	445	445	5.0	2.25	3/8 in SQ	23.1	588
47BAYPB48P3	13.3 - 35.4	18 - 48	180	315	315	5.2	2.34	3/8 in SQ	23.6	600
47BAYPB70P4	17.7 - 51.7	24 - 70	123	216	216	9.2	4.18	1/2 in SQ	27.2	691
47BAYPB90P4	29.5 - 66.4	40 - 90	80	140	140	9.2	4.18	1/2 in SQ	27.2	691

General: All tools must be used with a suitable Cleco/DGD nutrunner controller or PC software solution.
Weight of the batteries 26 V Li-ion battery 0.50 kg, 44 V Li-ion battery 0.85 kg, The 44 V battery is 19 mm / 0.750 in shorter than the 26 V battery.

Optional accessories: Batteries, battery chargers, scanner, sockets, and bits are not included in the standard equipment.

Extra Equipment: Sockets, batteries, and chargers must be ordered separately.

Cleco®
Innovation In Assembly Productivity

DESCRIPTION

- LiveWire 2 Right Angle Nutrunners
- Torque Range: 5.5 - 65 Nm / 4.1 - 47.9 ft-lbs
- Bolt Size: M5 - M10 / #10 - 9/16 in
- About 360 g lighter than LiveWire
- Expansion platform for attachments and accessories
- Brushless precision motor
- Exact torque measurement by transducer
- Integrated electronic intelligence with power management and I/O signal processing
- Integrated servo

47BAYPB65P4L

NOMENCLATURE FOR WEIGHT-REDUCED LIVEWIRE 2 RIGHT ANGLE NUTRUNNERS

47	B	A	Y	P	B	XX	XXX	X	L

Motor
47

Supply
B – Battery/ PM48

Version
A – Right angle

Data Transfer
Y – WLAN:Dual band 2.4 GHz. 5 GHz

Peripherals
P – Expansion platform

Version
B – 26–48 V

Max. Torque Nm
15 - 15 Nm 35 - 35 Nm
21 - 21 Nm 48 - 48 Nm
28 - 28 Nm 65 - 65 Nm

Output Drive Size
P3 - 3/8 in Sq. dr. spiral geared
P4 – 1/2 in Sq. dr. spiral geared

Output Drive Locking
– Pin locking
B – Ball locking

Tool Series
L – LiveWire 2 Series

RIGHT ANGLE	TORQUE RANGE		FREE SPEED (RPM)			WEIGHT-LESS BATTERY		OUTPUT DRIVE SIZE	LENGTH WITH 26 V BATTERY	
Model Number	ft-lb	Nm	26 V	44 V	Vmax	lbs	kg		in	mm
47BAYPB15P3L	4.1 - 11.1	5.5 - 15	487	891	891	4.03	1.83	3/8 in SQ	22.87	581
47BAYPB21P3L	5.9 - 15.5	8 - 21	370	680	680	4.03	1.83	3/8 in SQ	22.87	581
47BAYPB28P3L	7.4 - 20.7	10 - 28	264	482	482	4.03	1.83	3/8 in SQ	22.87	581
47BAYPB35P3L	8.9 - 25.8	12 - 35	255	446	446	4.14	1.88	3/8 in SQ	22.95	583
47BAYPB48P3L	13.3 - 35.4	18 - 48	181	316	316	4.34	1.97	3/8 in SQ	23.46	596
47BAYPB65P4L*	11.1 - 47.9	15 - 65	135	236	236	4.56	2.07	1/2 in SQ	23.54	598

General: All tools must be used with an approved Cleco/DGD tightening controller or suitable PC software.
Battery weights: 26 V Li-Ion 1.1 lbs. (0.50 kg).
44 V Li-Ion 1.9 lbs. (0.85 kg).
The 44 V battery is 19 mm / 0.750 in shorter than the 26 V battery.

Extra Equipment: Scanner, sockets, batteries, and chargers must be ordered separately.

*Refer to service literature for maintenance schedule

Cleco®
Innovation In Assembly Productivity

DESCRIPTION

- Pistol Grip Series
- Torque Range: 3.05 - 13 Nm / 2.2 - 9.6 ft-lbs
- Bolt Size: M5 - M6 / #10 - 1/4 in
- Brushless precision motor
- High-resolution resolver
- Exact torque measurement by transducer
- Integrated electronic intelligence with power management and I/O signal processing
- Integrated servo

17BPYSB13Q

The Apex µ-Guard bit shown above is not included with the tool - order separately, see page 153.

PISTOL GRIP NUTRUNNER NOMENCLATURE

17	B	P	X	X	B	XX	Q

- **17** – Motor 17
- **B** – Supply Battery/PM48
- **P** – Tool Version: P – Pistol grip
- **X** – Data Transfer: Y – WLAN: Dual band 2.4 GHz. 5 GHz; Z – XBee: IEEE 802.15.4 (4 tools per access point)
- **X** – Options: S – Barcode Scanner; – None; P – Expansion Platform
- **B** – Input Voltage: B – 26–48 V
- **XX** – Max. Torque (Nm): 05 - 5 Nm; 07 - 7 Nm; 09 - 9 Nm; 13 - 13 Nm
- **Q** – Type of Output Drive: Q – Quick Change

PISTOL	TORQUE RANGE		FREE SPEED (RPM)			WEIGHT-LESS BATTERY		OUTPUT DRIVE SIZE	HEIGHT WITH 26 V BATTERY	
Model Number	ft-lb	Nm	26 V	44 V	Vmax	lbs	kg		in	mm
17BPYPB05Q	2.2 - 3.7	3 - 5	1639	2428	2428	3.28	1.49	1/4 in Hex	8.44	215
17BPYPB07Q	2.2 - 5.2	3 - 7	1161	1721	1721	3.28	1.49	1/4 in Hex	8.44	215
17BPYPB09Q	2.2 - 6.6	3 - 9	887	1314	1314	3.28	1.49	1/4 in Hex	8.44	215
17BPYPB13Q	2.2 - 9.6	3 - 13	629	931	931	3.28	1.49	1/4 in Hex	8.44	215

General: All tools must be used with an approved Cleco/DGD tightening controller or suitable PC software.
Battery weights: 26 V Li-Ion 1.1 lbs. (0.50 kg), 44 V Li-Ion 1.9 lbs. (0.85 kg).
The 44 V battery is 19 mm / 0.750 in shorter than the 26 V battery.

Extra Equipment: Sockets, batteries, and chargers must be ordered separately.

Cleco®
Innovation In Assembly Productivity

DESCRIPTION

- Tube Nut Series
- Torque Range: 10 - 40 Nm / 7.4 - 29.5 ft-lbs
- Bolt Size: M6 - M8 / 1/4 in - 7/16 in
- Brushless precision motor
- High-resolution resolver
- Exact torque measurement by transducer
- Integrated electronic intelligence with power management and I/O signal processing
- Integrated servo

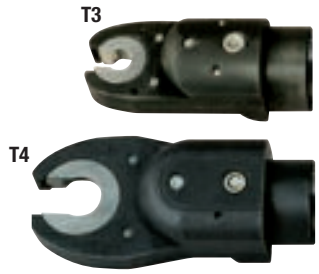

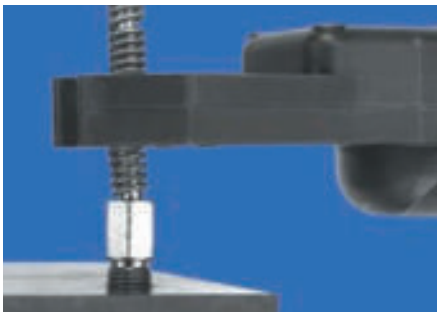

On the 47BT tube nutrunner a single lever controls the tightening of the fastener and the return of the hex socket to the open position. This flexibility paired with proven performance significantly increases productivity during assembly.

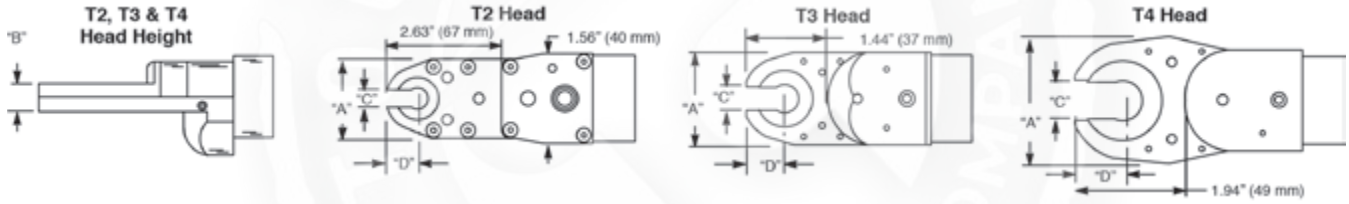

TUBE NUTRUNNER NOMENCLATURE

47 B T X X X XX

Motor
17

Supply
B – Batt./PM48

Tool Version
T – Tube nut wrench

Data Transfer
Y – WLAN: Dual band 2.4 GHz. 5 GHz
Z – XBee: IEEE 802.15.4 (4 tools per access point)

Options
S – Barcode scanner
– None

Input Voltage
B-26-48 V

Head Size
T2 - 20 Nm
T3 - 30 Nm
T4 - 40 Nm

Socket Sizes

EA - 1/4 in	M5 – 5 mm	MH – 14 mm	MP – 22 mm
EC – 3/8 in	M6 – 6 mm	MI – 15 mm	MQ – 23 mm
EE – 1/2 in	MA – 7 mm	MJ – 16 mm (5/8 in)	MR – 24 mm (15/16 in)
EF – 9/16 in	MB – 8 mm (5/16 in)	MK – 17 mm	MS – 25 mm
EH – 11/16 in	MD – 10 mm	ML – 18 mm	MT – 26 mm
EJ – 13/16 in	ME – 11 mm (7/16 in)	MM – 19 mm (3/4 in)	MU – 27 mm (1 1/16 in)
EK – 7/8 in	MF – 12 mm	MN – 20 mm	
EM – 1 in	MG – 13 mm	MO – 21 mm	

SOCKET IDENTIFIER

KSX XX X X

Head Size
KS2 – T2
KS3 – T3
KS4 – T4

Max. Hex Socket Sizes

MG. EE	T2 head version
MM. 3/4 in	T3 head version
MU. 1 1/16 in	T4 head version
00. ## (special)	All head versions

Extensions
0 – Flush
2 – 1/4 in
4 – 1/2 in
6 – 3/4 in

Type of Output Drive
0 -Partial thru hex
1 - Thru hex
2 - Double thru hex
3 - Partial double thru hex

TUBE NUT	TORQUE RANGE		FREE SPEED (rpm)			WEIGHT-LESS BATTERY		MAX. DRIVE SIZE	LENGTH WITH 26 V BATTERY		HEAD							
											A Width		B Blade Ht.		C Opening		D End/Cntr.	
Model Number	ft-lb	Nm	26 V	44 V	Vmax	lbs	kg		in	mm	in	mm	in	mm	in	mm	in	mm
47BTYSB20T2	7.4 - 14.8	10 - 20	260	455	455	5.6	2.54	1/2 in	23.6	598	1.42	36	0.55	14	0.28	7	0.53	13
47BTYSB30T3	11.1 - 22.1	15 - 30	188	329	329	5.6	2.53	3/4 in	23.3	588	1.65	42	0.59	15	0.475	12	0.73	19
47BTYSB40T4	14.8 - 29.5	20 - 40	141	247	247	6.4	2.90	1 1/16 in	29.9	612	2.36	60	0.59	15	0.675	17	0.93	24

General: All tools must be used with an approved Cleco/DGD tightening controller or suitable PC software.
Battery weights: 26 V Li-Ion 1.1 lbs. (0.50 kg), 44 V Li-Ion 1.9 lbs (0.85 kg)
The 44 V battery is 19 mm / 0.750 in shorter than the 26 V battery.

Extra Equipment: Batteries and chargers must be ordered separately.

To order individual sockets, use a "KS" prefix.
(i.e. KS2EA01 for a T2, 1/4 in. flush thru hex socket.)

Cleco®
Innovation In Assembly Productivity

DESCRIPTION

- Crowfoot Series
- Torque Range: 10.5 - 30 Nm / 7.7 - 22.1 ft-lbs
- Bolt Size: M6 - M8 / 1/4 in - 7/16 in
- Brushless precision motor
- High-resolution resolver
- Exact torque measurement by transducer
- Integrated electronic intelligence with power management and I/O signal processing
- Integrated servo

C1 – 15° head (order no. 301071)
Maximum recommended torque: 30 Nm

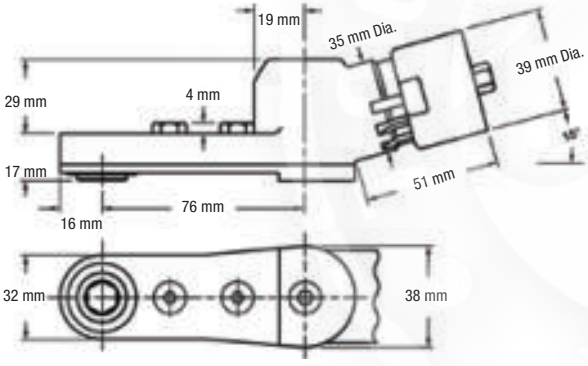

C3 – 30° head (order no. 301072)
Maximum recommended torque: 30 Nm

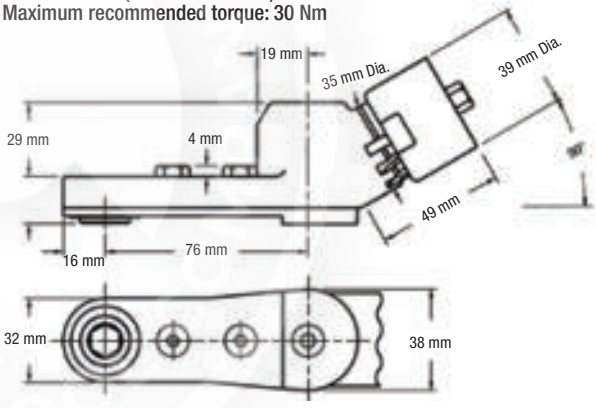

CROWFOOT NUTRUNNER NOMENCLATURE

47 B C X X B XX

- Motor: 47
- Supply: B - Batt./PM48
- Tool Version: C – Crowfoot nutrunner
- Data Transfer: Y – WLAN: Dual band 2.4 GHz. 5 GHz; Z – XBee: IEEE 802.15.4 (4 tools per access point)
- Options: S – Barcode scanner; – None
- Input Voltage: B – 26-48 V
- Head Version: C1 - 15°; C3 - 30°

SOCKET IDENTIFIER

CS XX X X

- Head: CS – Crowfoot
- Type of Output Drive: 1 – Thru hex
- Extensions: 0 – Flush; 4 – 1/2 in; 6 – 3/4 in
- Socket Sizes:
  - EA - 1/4 in
  - MA – 7 mm
  - MF – 12 mm
  - EC – 3/8 in
  - MB – 8 mm (5/16 in)
  - MG – 13 mm
  - EE – 1/2 in
  - MC – 9 mm
  - MH – 14 mm
  - EF – 9/16 in
  - MD – 10 mm
  - MI – 15 mm
  - ME – 11 mm (7/16 in)

CROWFOOT	TORQUE RANGE		FREE SPEED (rpm)			WEIGHT-LESS BATTERY		MAX. DRIVE SIZE	LENGTH WITH 26 V BATTERY	
Model Number	ft-lb	Nm	26 V	44 V	Vmax	lbs	kg		in	mm
47BCYSB30C1	7.7 - 22.1	10.5 - 30	186	326	326	6.12	2.78	15 mm	26.3	667
47BCYSB30C3	7.7 - 22.1	10.5 - 30	186	326	326	6.12	2.78	15 mm	26	660

General: All tools must be used with an approved Cleco/DGD tightening controller or suitable PC software.
Battery weights: 26 V Li-Ion 1.1 lbs (0.50 kg), 44 V Li-Ion 1.9 lbs (0.85 kg).
The 44 V battery is 19 mm / 0.750 in shorter than the 26 V battery.

Extra Equipment: Batteries and chargers must be ordered separately.
To order individual sockets, use a "CS" prefix before the required socket.
(i.e. CSEE01 for a 1/2 in. flush thru hex socket.)

Cleco®
Innovation In Assembly Productivity

DESCRIPTION

- Right Angle Series
- Torque Range: 2 - 230 Nm / 1.5 - 169.6 ft-lbs
- Bolt Size: M5 - M16 / #10 - 5/8 in
- Brushless precision
- Resolver control
- Transducer control
- Memory intelligence

XX E A E XXX XXX X

- XX – Motor 18. 48
- E – Power E-Electric
- A – Tool Style: A – Right Angle
- E – Connector Air-LB
- XXX – Max Output Torque (Nm): Under 60 Nm. rounded up to the nearest 1 Nm. Over 60 Nm. rounded to the nearest 5 Nm.
- XXX – Output Drive: AL2 – 1/4 in Sq.Dr.; AL3 – 3/8 in Sq.Dr.; AM3 – 3/8 in Sq.Dr.; AM4 – 1/2 in Sq.Dr.; AH4 – 1/2 in Sq.Dr.; MH4 – 1/2 in Sq.Dr.; AX6 – 3/4 in Sq.Dr.
- X – Retainer: - Pin retainer; B Ball retainer

RIGHT ANGLE	TORQUE RANGE		MAX. SPEED	WEIGHT*		OUTPUT DRIVE SIZE	LENGTH		ANGLE HEAD			
									Side to Center		Height	
Model Number	ft-lbs	Nm	RPM	lbs	kg		in	mm	in	mm	in	mm
18EAE08AL2	1.5 - 5.9	2 - 8	3000	2.9	1.3	1/4 in	13.6	345	0.51	13	1.4	36
18EAE15AM3	3.0 - 11.1	4 - 15	1300	3.3	1.5	3/8 in	14.8	376	0.59	15	1.6	41
18EAE22AM3	3.7 - 16.2	5 - 22	920	3.3	1.5	3/8 in	14.8	376	0.59	15	1.6	41
18EAE28AM3	4.4 - 20.7	6 - 28	700	3.3	1.5	3/8 in	14.8	376	0.59	15	1.6	41
48EAE15AL3	2.2 - 11.1	3 - 15	2855	3.8	1.7	3/8 in	15.7	398	0.59	15	1.6	41
48EAE28AL3	4.4 - 20.7	6 - 28	1300	4.1	1.9	3/8 in	16.2	410	0.59	15	1.6	41
48EAE41AM3	6.6 - 30.2	9 - 41	1090	4.3	2.0	3/8 in	17.3	440	0.75	19	1.9	48
48EAE58AM3	8.9 - 42.8	12 - 58	770	4.3	2.0	3/8 in	17.3	440	0.75	19	1.9	48
48EAE58AM4	8.9 - 42.8	12 - 58	770	4.3	2.0	1/2 in	17.3	440	0.75	19	1.9	48
48EAE90AH4	13.3 - 64.2	18 - 87	515	6.6	3.0	1/2 in	18.5	470	0.81	21	2.3	58
48EAE105AH4	15.5 - 76.7	21 - 104	340	6.6	3.0	1/2 in	18.5	470	0.81	21	2.3	58
48EAE135MH4	19.9 - 98.1	27 - 133	265	7.3	3.3	1/2 in	19.1	485	0.94	24	2.4	61
48EAE175AX6	26.6 - 129.8	36 - 176	190	10.2	4.6	3/4 in	21.6	549	1.06	27	2.7	69
48EAE230AX6	33.9 - 169.6	46 - 230	145	10.2	4.6	3/4 in	21.6	549	1.06	27	2.7	69

*Weights are without tool cable and reaction bar.
General: All tools must be used with an approved ATG cable and controller.
Standard Equipment: Air - LB Connector. Ball retainer optional.
Tools with Matrix connector available upon request

Extra Equipment: Std. tool cable 301866-XX, RA swivel cable 301903-XX, Inline swivel cable 301904-XX, Extension cable 301877-XX.

Cleco®
Innovation In Assembly Productivity

DESCRIPTION

- Pistol Grip Series
- Torque Range: 2 - 1000 Nm / 1.5 - 740 ft-lbs
- Bolt Size: M5 - M22 / #10 - 1 in
- Brushless precision
- Resolver control
- Transducer control
- Memory intelligence

18EPE12Q

48EPE25D3

XX E P E XXX XX X

- Motor: 18. 48
- Power: E-Electric
- Connector: Air-LB
- Retainer: - Pin retainer; B Ball retainer
- Tool Style: P – Pistol
- Max Output Torque (Nm): Under 60 Nm. rounded up to the nearest 1 Nm. Over 60 Nm. rounded to the nearest 5 Nm.
- Output Drive: Q – Quick change; D2 – 1/4 in Sq.Dr.; D6 – 3/4 in Sq.Dr.; D3 – 3/8 in Sq.Dr.; D4 – 1/2 in Sq.Dr.; D8 – 1 in Sq.Dr.

PISTOL GRIP	TORQUE RANGE		MAX. SPEED	WEIGHT*		OUTPUT DRIVE SIZE	LENGTH		SIDE TO CENTER	
Model Number	ft-lbs	Nm	RPM	lbs	kg		in	mm	in	mm
18EPE06Q	1.5 - 4.4	2 - 6	4000	2.2	1.0	1/4 in Hex	7.0	178	0.84	21
18EPE06D2	1.5 - 4.4	2 - 6	4000	2.2	1.0	1/4 in	6.5	165	0.84	21
18EPE12Q	2.2 - 8.9	3 - 12	1820	2.4	1.1	1/4 in Hex	7.7	196	0.84	21
18EPE12D3	2.2 - 8.9	3 - 12	1820	2.4	1.1	3/8 in	7.2	183	0.84	21
18EPE17Q	3.0 - 12.5	4 - 17	1290	2.4	1.1	1/4 in Hex	7.7	196	0.84	21
18EPE17D3	3.0 - 12.5	4 - 17	1290	2.4	1.1	3/8 in	7.2	183	0.84	21
18EPE22D3	3.7 - 16.2	5 - 22	985	2.4	1.1	3/8 in	7.2	183	0.84	21
18EPE31D3	5.2 - 22.9	7 - 31	695	2.4	1.1	3/8 in	7.2	183	0.84	21
48EPE12Q	2.2 - 8.9	3 - 12	4000	2.7	1.2	1/4 in Hex	8.2	208	0.84	21
48EPE12D2	2.2 - 8.9	3 - 12	4000	2.7	1.2	1/4 in	7.7	196	0.84	21
48EPE25D3	3.7 - 18.4	5 - 25	1820	2.9	1.3	3/8 in	8.4	213	0.84	21
48EPE36D3	5.9 - 26.6	8 - 36	1290	2.9	1.3	3/8 in	8.4	213	0.84	21
48EPE48D3	7.4 - 35.4	10 - 48	985	3.0	1.4	3/8 in	8.6	218	0.84	21
48EPE65D4	9.6 - 47.9	13 - 65	750	5.0	2.3	1/2 in	11.4	290	1.1	28
48EPE90D4	14.0 - 66.4	19 - 90	510	5.3	2.4	1/2 in	12.0	305	1.1	28
48EPE125D4	19.2 - 92.2	26 - 125	360	5.3	2.4	1/2 in	12.0	305	1.1	28
48EPE150D4	22.9 - 110.6	31 - 150	240	5.3	2.4	1/2 in	12.0	305	0.9	23
48EPE200D6 (swing bar)	92 - 144	125 - 195	180	9.5	4.3	3/4 in	16.2	410	1.13	29
48EPE500D6 (swing bar)	225 - 368	300 - 500	53	9.8	4.5	3/4 in	16.2	410	1.13	29
48EPE1000D8 (swing bar)	370 - 740	500 - 1000	33	16.2	7.3	1 in	19.16	486	1.5	38

*Weights are without tool cable or suspension bail.
General: All tools must be used with an approved ATG cable and controller.

Extra Equipment: Std. tool cable 301866-XX, RA swivel cable 301903-XX, Inline swivel cable 301904-XX, Extension cable 301877-XX.

Standard Equipment: Air - LB Connector; Suspension Bail; Dead Handle is included with 18EPE12Q & 18EPE12D3. Reaction bar is included with pistol tools with output torques of 17 - 1000 Nm.
Ball retainer optional. Tools with Matrix connector available upon request.

Cleco®
Innovation In Assembly Productivity

DESCRIPTION

- Inline Non-Floating Series
- Torque Range: 2 - 150 Nm / 1.5 - 110 ft-lbs
- Bolt Size: M5 - M14 / #10 - 5/8 in
- Brushless precision
- Resolver control
- Transducer control
- Memory intelligence

18ESE06Q

48ESE25D3

XX E S E XXX XX X

- Motor: 18. 48
- Power: E-Electric
- Connector: Air-LB
- Tool Style: S – Inline
- Max Output Torque (Nm): Under 60 Nm. rounded up to the nearest 1 Nm. Over 60 Nm. rounded to the nearest 5 Nm.
- Output Drive: Q – Quick change; D2 – 1/4 in Sq.Dr.; D3 – 3/8 in Sq.Dr.; D4 – 1/2 in Sq.Dr.
- Retainer: - Pin retainer; B Ball retainer

INLINE NON-FLOATING	TORQUE RANGE		MAX. SPEED	WEIGHT*		OUTPUT DRIVE SIZE	LENGTH		SIDE TO CENTER	
Model Number	ft-lbs	Nm	RPM	lbs	kg		in	mm	in	mm
18ESE06Q	1.5 - 4.4	2 - 6	4000	2.5	1.1	1/4 in Hex	12.3	312	0.91	23
18ESE06D2	1.5 - 4.4	2 - 6	4000	2.5	1.1	1/4 in	11.8	300	0.91	23
18ESE12Q	2.2 - 8.9	3 - 12	1820	2.7	1.2	1/4 in Hex	13.0	330	0.91	23
18ESE12D3	2.2 - 8.9	3 - 12	1820	2.7	1.2	3/8 in	12.4	315	0.91	23
18ESE17Q	3.0 - 12.5	4 - 17	1290	2.7	1.2	1/4 in Hex	13.0	330	0.91	23
18ESE17D3	3.0 - 12.5	4 - 17	1290	2.7	1.2	3/8 in	12.4	315	0.91	23
18ESE22D3	3.7 - 16.2	5 - 22	985	2.7	1.2	3/8 in	12.4	315	0.91	23
18ESE31D3	5.2 - 22.9	7 - 31	695	2.7	1.2	3/8 in	12.4	315	0.91	23
48ESE12Q	2.2 - 8.9	3 - 12	4000	3.0	1.4	1/4 in Hex	13.5	343	0.91	23
48ESE12D2	2.2 - 8.9	3 - 12	4000	3.0	1.4	1/4 in	13.0	330	0.91	23
48ESE25D3	4.4 - 18.4	6 - 25	1820	3.2	1.5	3/8 in	13.6	345	0.91	23
48ESE36D3	5.9 - 26.6	8 - 36	1290	3.2	1.5	3/8 in	13.6	345	0.91	23
48ESE48D3	7.4 - 35.4	10 - 48	985	3.3	1.5	3/8 in	13.8	351	0.91	23
48ESE65D4	9.6 - 47.9	13 - 65	750	5.3	2.4	1/2 in	16.6	420	1.13	29
48ESE90D4	14.0 - 66.4	19 - 90	510	5.6	2.5	1/2 in	17.1	435	1.13	29
48ESE125D4	19.2 - 92.2	26 - 125	360	5.6	2.5	1/2 in	17.1	435	1.13	29
48ESE150D4	22.9 - 110.6	31 - 150	240	5.6	2.5	1/2 in	17.1	435	1.13	29

*Weights are without tool cable.
General: All tools must be used with an approved ATG cable and controller.
Standard Equipment: Air - LB Connector; Dead Handle is included with 18ES12Q and 18ES12D3.
Ball retainer optional.
Tools with Matrix connector available upon request.
Reaction bar is included with inline tools with output torques of 17 - 150 NM.

Extra Equipment: Std. tool cable 301866-XX, RA swivel cable 301903-XX, Inline swivel cable 301904-XX, Extension cable 301877-XX.
Mounting Plates: 543231 - (all with exception of listed below)
543235 - 18ESE06Q/D2, 48ESE12Q/D2
49087108 - 48ESE65D4, 48ESE90D4, 48ESE125D4, & 48ESE150D4.

Cleco®
Innovation In Assembly Productivity

With straight drive, offset drive, and angle drive configurations, each available with reversible gears, and four different motor sizes to suit different torque requirements, there's a Cleco | DGD Intelligent Spindle to fit most any situation. Your Apex Tool Group Technical Sales Representative will work with you to determine the best solution for you. We can also provide you with application assistance in automation integration, joint analysis testing, complex data connection, and more.

INTELLIGENT SPINDLE CONFIGURATIONS

Straight Drive

Straight Drive with reversible gears

Offset Drive

Offset Drive with reversible gears

Angle Drive

Angle Drive with reversible gears

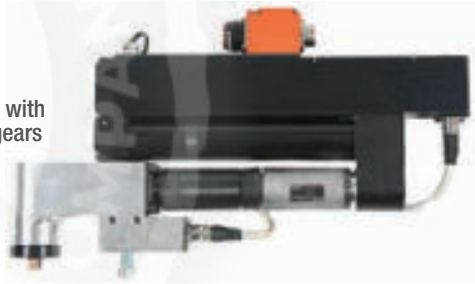

1	BTSE	–	1B035A	–	2/	1M1B	–	1ZB
X	XXXX	–	XXXXXX	–	X	XXXX	–	XXXXX

Size
1. 2. 3. 4

Motor with servo-amplifier & measurement card
B - Brushless Motor
U - Reverse gearing
TS - Tightening System
E - Standard

Gear
1 - Size
B - Brushless motor gear
XXX - Max. torque
A - Generation

2nd Transducer for cross check
2 - 2x only for Z attachment

Transducer
1 - Size
K - Combination torque + angle
1 - Capacity level 1 or 2
B - Version
M - Only moment. no angle encoder

Attachment
1 - Size
Z - Straight attachment
VK - Offset drive with transducer
WK - Angle drive with transducer
1 - Capacity level
B - Version

Note: Floating spindle adapter must be ordered separately.

INTELLIGENT SPINDLE SIZES AND TORQUE RANGES

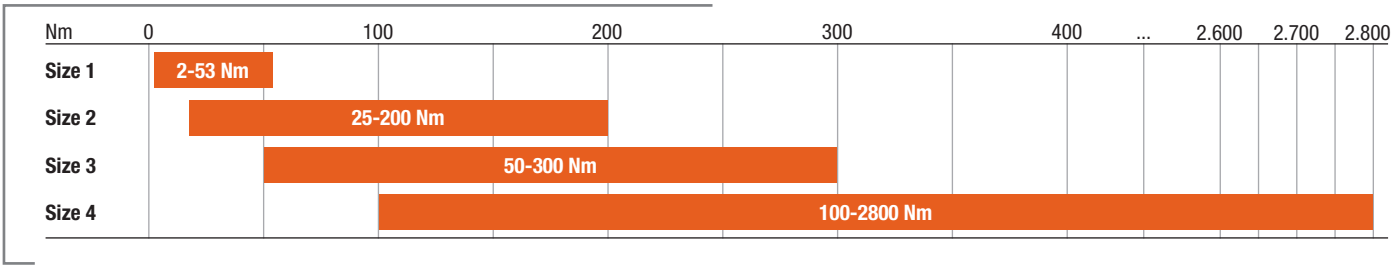

Cleco®
Innovation In
Assembly Productivity

DESCRIPTION

- Cleco offers a range of attachments for special fastener and difficult access applications.
- Some standard solutions are cataloged on the following pages.
- Not all solutions are cataloged, so if you don't find what you need, please submit the following so that we may fulfill your application.

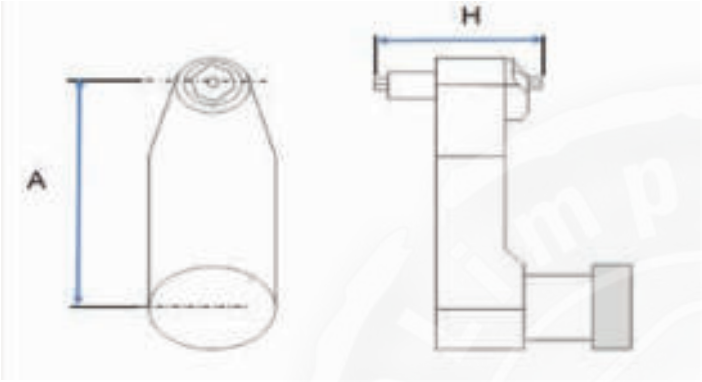

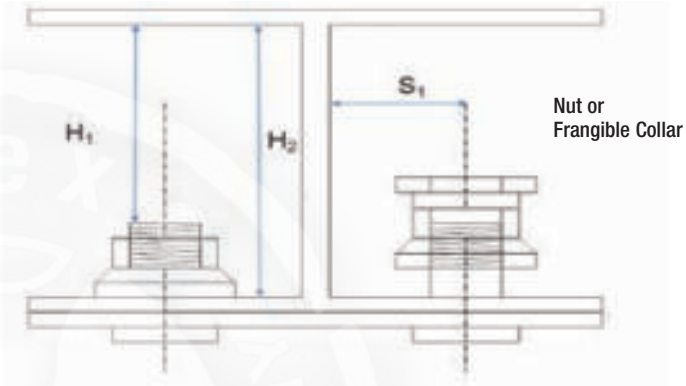

1. Part number of nut or frangible collar		
2. Hex size of nut or frangible collar	in / mm	
3. Final torque requirement of fastener	in-lbs / Nm	
4. "S1" edge distance between centerline of fastener to nearest structure	in / mm	
5. "H2" total working space	in / mm	
6. "H1" minimum clearance over pin	in / mm	
7. Hex key required?	in / mm / N/A	
8. "A" offset required - min/max	in / mm	
9. Extended socket required?	in / mm / N/A	
10. "H" maximum height of gear head. including socket	in / mm	
11. Determine type of tool	Type 1 | Type 2 | Type 3 | Type 4	

TYPE 1
Pistol - Offset

TYPE 2
Pistol - Inline

TYPE 3
Angle - 17 Degree

TYPE 4
Angle - Standard

Note: Attachments also available for DC Electric Cordless Tools, pg. 133-135, and DC Corded Tools, pg. 138-139.

Cleco®
Innovation In Assembly Productivity

PISTOL OFFSET														
Base Model	Max Torque		RPM	Dim A		Dim H1		Dim H2		Dim L		Dim R		Options
	in-lbs	Nm		in	mm	in	mm	in	mm	in	mm	in	mm	
FCB 14CS88-ADBH	90	10	310	1.25	31.8	0.47	11.9	0.61	15.5	2.07	52.6	0.32	8.1	See Below
FCB 14CN88-ADBH	90	10	280	1.25	31.8	0.47	11.9	0.61	15.5	2.07	52.6	0.32	8.1	See Below
FCB 14CS88-AAKF	90	10	350	4.08	103.6	0.47	11.9	1.61	40.9	4.91	124.7	0.32	8.1	See Below
FCB 14CN88-AAKF	90	10	320	4.08	103.6	0.47	11.9	1.61	40.9	4.91	124.7	0.32	8.1	See Below
FCB 14CS88-ADBJ	120	13	310	2.68	68.1	0.47	11.9	0.78	19.8	3.53	89.7	0.35	8.9	See Below
FCB 14CN88-ADBJ	120	13	280	2.68	68.1	0.47	11.9	0.78	19.8	3.53	89.7	0.35	8.9	See Below
FCB 14CN88-AKBK	190	20	230	3.38	85.9	0.68	17.3	1.28	32.5	4.44	112.8	0.50	12.7	See Below
FCB 14CN87-AKBK	190	20	350	3.38	85.9	0.68	17.3	1.28	32.5	4.44	112.8	0.50	12.7	See Below

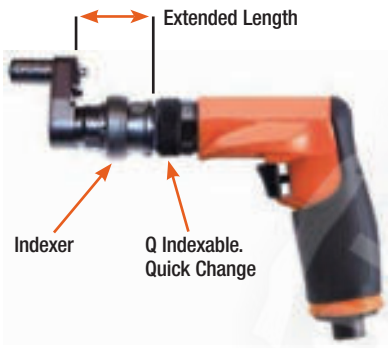

SYSTEM OPTION	
Q	Indexable Quick Change between Base Tool and Head

HEAD OPTIONS				
1	2	3	4	5
Indexer on Head	Extended Length (in/mm)	Drive Hex Size (in)	Extended Drive Socket Length (in/mm)	Hold Hex Key Size (in)
Yes or No	2.0 / 50 6.0 / 152.4	7/32 1/4 9/32 5/16 11/32 3/8 7/16	Flush 0.375 / 9.5 0.5 / 12.7 0.625 / 16 1.0 / 25.4 2.0 / 51	1/16 5/64 3/32

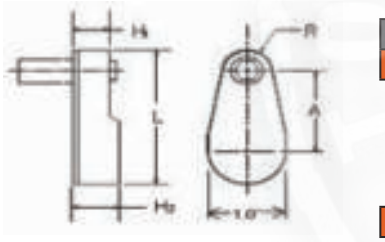

HOW TO SPECIFY						
Base Model	System Option	Head Options (From Above)				
		1	2	3	4	5
	Q or Blank	Indexer on Head	Extended Length	Drive Hex Size	Extended Drive Socket Length	Hold Hex Key Size
EXAMPLE						
FCB 14CS88-AAKF	Q	No	2 in / 50 mm	5/16 in	0.5 in / 12.7 mm	1/16 in

PISTOL INLINE								
Base Model	Max Torque		RPM	Length		Weight		Options
	in-lbs	Nm		in	mm	lbs	kg	
FCB 14CFS288-BKBH	90	10	350	7.2	182.9	2.3	1.0	See Below
FCB 14CFS288-BKKE	110	12	350	9.8	248.9	2.5	1.1	See Below

OPTIONS		
1	2	3
Drive Hex Size (in)	Extended Drive Socket Length (in / mm)	Hold Hex Key Size (in)
7/32 1/4 9/32 5/16 11/32 3/8 7/16	2.0 / 51 3.0 / 76	1/16 5/64 3/32

HOW TO SPECIFY			
Base Model	Head Options (From Above)		
	1	2	3
EXAMPLE			
FCB 14CFS288-BKBH	5/16	2 in / 51mm	5/64

Cleco®
Innovation In Assembly Productivity

ANGLE 17 DEGREE OFFSET

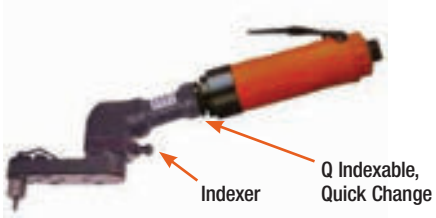

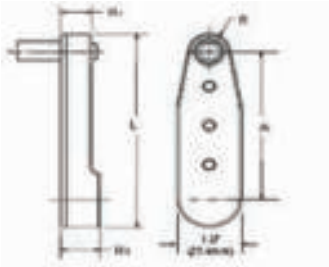

BASE MODEL	MAX TORQUE		RPM	DIM A		DIM H1		DIM H2		DIM L		DIM R		OPTIONS
	in-lbs	Nm		in	mm	in	mm	in	mm	in	mm	in	mm	
FCB 15LN287-CDBJ	110	12	260	2.69	68.3	0.47	11.9	0.78	19.8	3.54	89.9	0.35	8.9	See Below
FCB 15LS286-CAAK	120	13	380	1.33	33.8	0.47	11.9	0.61	15.5	2.26	57.4	0.43	10.9	See Below
FCB 15LN286-CAAK	120	13	360	1.33	33.8	0.47	11.9	0.61	15.5	2.26	57.4	0.43	10.9	See Below
FCB 15LS286-CDFA	120	13	360	2.75	69.9	0.47	11.9	0.61	15.5	3.68	93.5	0.43	10.9	See Below
FCB 15LN286-CDFA	120	13	340	2.75	69.9	0.47	11.9	0.61	15.5	3.68	93.5	0.43	10.9	See Below
FCB 15LN287-CDJH	240	26	220	3.27	83.1	0.50	12.7	0.65	16.5	4.30	109.2	0.44	11.1	See Below
FCB 15LN286-CDJH	240	26	360	3.27	83.1	0.50	12.7	0.65	16.5	4.30	109.2	0.44	11.1	See Below
FCB 15LN287-CDGB	390	43	160	3.00	76.2	0.69	17.5	0.94	23.9	4.19	106.4	0.56	14.2	See Below
FCB 15LN286-CDGB	390	43	270	3.00	76.2	0.69	17.5	0.94	23.9	4.19	106.4	0.56	14.2	See Below

ANGLE STANDARD

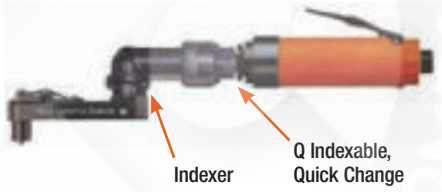

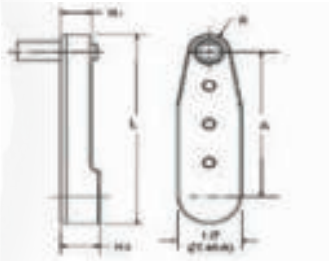

BASE MODEL	MAX TORQUE		RPM	DIM A		DIM H1		DIM H2		DIM L		DIM R		OPTIONS
	in-lbs	Nm		in	mm	in	mm	in	mm	in	mm	in	mm	
FCB 15LS288-EDBJ	80	9	200	2.69	68.3	0.47	11.9	0.78	19.8	3.54	89.9	0.35	8.9	See Below

OPTIONS	1	2	3	4
	INDEXER	DRIVE HEX SIZE	EXTENDED DRIVE SOCKET LENGTH	HOLD HEX KEY SIZE
-CDBJ -CAAK -CDFA	Yes No	7/32 1/4 9/32 5/16 11/32 3/8 7/16	Flush 0.375 in / 9.5mm 0.5 in / 12.7mm 0.625 in / 16mm 0.75 in / 19.5mm 1.0 in / 25.4mm 2 in / 51mm	1/16 5/64 3/32
-CDJH	Yes No	5/16 3/8 7/16 1/2 9/16	Flush 0.5 in / 12.7mm 0.625 in / 16mm 0.75 in / 19.5mm 1.0 in / 25.4mm	3/32 1/8 5/32
-CDGB	Yes No	7/16 1/2 9/16 5/8 3/4	Flush 0.5 in / 12.7mm 0.625 in / 16mm 0.75 in / 19.5mm 1.0 in / 25.4mm 2.0 in / 51mm	1/8 5/32 3/16 7/32

HOW TO SPECIFY	HEAD OPTIONS (FROM ABOVE)				
BASE MODEL	SYSTEM OPTION: Q or Blank	1	2	3	4
EXAMPLE					
FCB 15LS286-CAAK	Q	No	1/4	0.5 in / 12.7mm	1/16

Cleco®
Innovation In
Assembly Productivity

PISTOL OFFSET

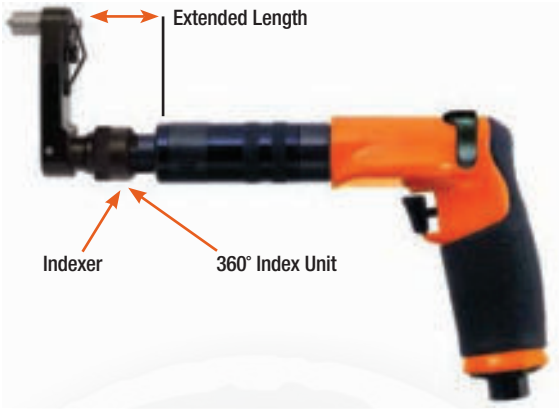

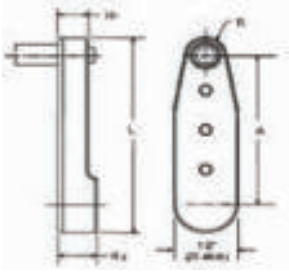

BASE MODEL	TORQUE RANGE		RPM	DIM A		DIM H1		DIM H2		DIM L		DIM R		OPTIONS
	in-lbs	Nm		in	mm	in	mm	in	mm	in	mm	in	mm	
TCB 19TTA15Q-ADCJ	38-110	4.3-12.4	230	2.68	68.1	0.38	9.7	0.61	15.5	3.53	89.7	0.35	8.9	See Below
TCB 88RSATP-2-ADCJ	12-120	1.4-13.6	170	2.68	68.1	0.38	9.7	0.61	15.5	3.53	89.7	0.35	8.9	See Below
TCB 88RSATP-5-ADCJ	13-120	1.4-13.6	350	2.68	68.1	0.38	9.7	0.61	15.5	3.53	89.7	0.35	8.9	See Below

OPTIONS

1	2	3	4	5
INDEXER	EXTENDED LENGTH	DRIVE HEX SIZE	EXTENDED DRIVE SOCKET LENGTH	HOLD HEX KEY SIZE
Yes No	2 in / 50mm 6 in / 152.4mm	1/4 9/32 5/16	Flush 0.375 in / 9.5mm 0.5 in / 12.7mm 0.625 in / 16mm 1.0 in / 25.4mm 2 in / 51mm	No Key - Drive Only 5/64 3/32

HOW TO SPECIFY	HEAD OPTIONS (FROM ABOVE)				
BASE MODEL	1	2	3	4	5

EXAMPLE

TCB 88RSATP-5-ADCJ	No	2 in / 50mm	9/32	0.5 in / 12.7mm	3/32

Cleco®
Innovation In Assembly Productivity

ANGLE 17 DEGREE OFFSET

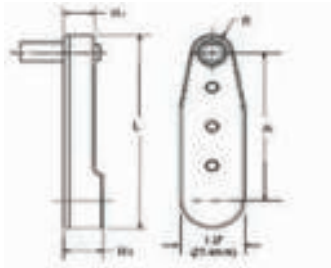

BASE MODEL	MAX TORQUE		RPM	DIM A		DIM H1		DIM H2		DIM L		DIM R		OPTIONS
	in-lbs	Nm		in	mm	in	mm	in	mm	in	mm	in	mm	
TCB 19SCA06-CDBJ	4-64	0.5 - 7.2	130	2.68	68.1	0.47	11.9	0.61	15.5	3.53	89.7	0.35	8.9	See Below
TCB 88RSAL-5-CDCJ	21-110	2.4 - 12.4	210	2.68	68.1	0.38	9.7	0.61	15.5	3.53	89.7	0.35	8.9	See Below
TCB 24RAA23-CDHH	140-250	15.5 - 28.2	360	3.38	85.9	0.68	17.3	1.28	32.5	4.44	112.8	0.50	12.7	See Below

ANGLE STANDARD

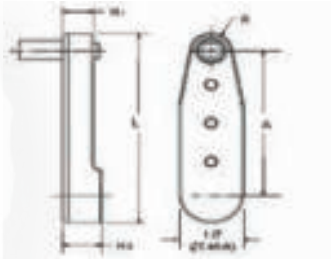

BASE MODEL	MAX TORQUE		RPM	DIM A		DIM H1		DIM H2		DIM L		DIM R		OPTIONS
	in-lbs	Nm		in	mm	in	mm	in	mm	in	mm	in	mm	
TCB 19SCA06-EDCJ	4-59	0.5-6.7	140	2.68	68.1	0.38	9.7	0.61	15.5	3.53	89.7	0.35	8.9	See Below
TCB 8RSA-7-EDCJ	9-80	1.1-9.0	310	2.68	68.1	0.38	9.7	0.61	15.5	3.53	89.7	0.35	8.9	See Below

OPTIONS	1	2	3	4
	INDEXER	DRIVE HEX SIZE	EXTENDED DRIVE SOCKET LENGTH	HOLD HEX KEY SIZE
-CDBJ -EDCJ	Yes No	1/4 in 5/16 in	Flush 0.5 in / 12.7mm 0.625 in / 16mm 1.0 in / 25.4mm	No Key - Drive Only 5/64 3/32
-CDCJ	Yes No	9/32 5/16 11/32 3/8	Flush 0.5 in / 12.7mm 0.625 in / 16mm 0.75 in / 19.5mm 1.0 in / 25.4mm	No Key - Drive Only 3/32 1/8
-CDHH	Yes No	5/16 3/8 7/16 1/2 9/16	Flush 0.5 in / 12.7mm 0.625 in / 16mm 1.0 in / 25.4mm 2.0 in / 51mm	No Key - Drive Only 3/32 1/8 5/32
HOW TO SPECIFY	HEAD OPTIONS (FROM ABOVE)			
BASE MODEL	1	2	3	4
EXAMPLE				
TCB 19SCA06-EDCJ	No	5/16 in	0.5 in / 12.7mm	5/64

Your Fastening Tool Expert

Apex Fastening Tools | Aerospace Intro ---------- 148

Socket Head Insert Bits, Hex Power Drive, Hex Extensions, Triple Square Bits --- 149

Phillips® Bits, Slotted Bits, Torx® Bits ---------- 150

Torq-Set® Bits, Torx® Bits ---------- 151

Hi-Torque® Bits, Tri-Wing® Bits ---------- 152

Apex U-Guard™ | Sockets, Extensions, Bit Holders ---------- 153

Apex Sockets and Universal Wrenches | Wrenches, Wrench Adapters, Sockets ---- 154

Your Fastening Tool Expert

FOR ALL THESE FASTENING TYPES:

From aircraft manufacturing to critical repair operations, aerospace companies demand fastening drive tools that are high-precision, reliable, and durable. Whether an assembly operation, repair, or MRO application, a plant can realize significant cost savings and productivity enhancements by using screwdriver bits and sockets that last longer, fit better, and offer a superior return on investment.

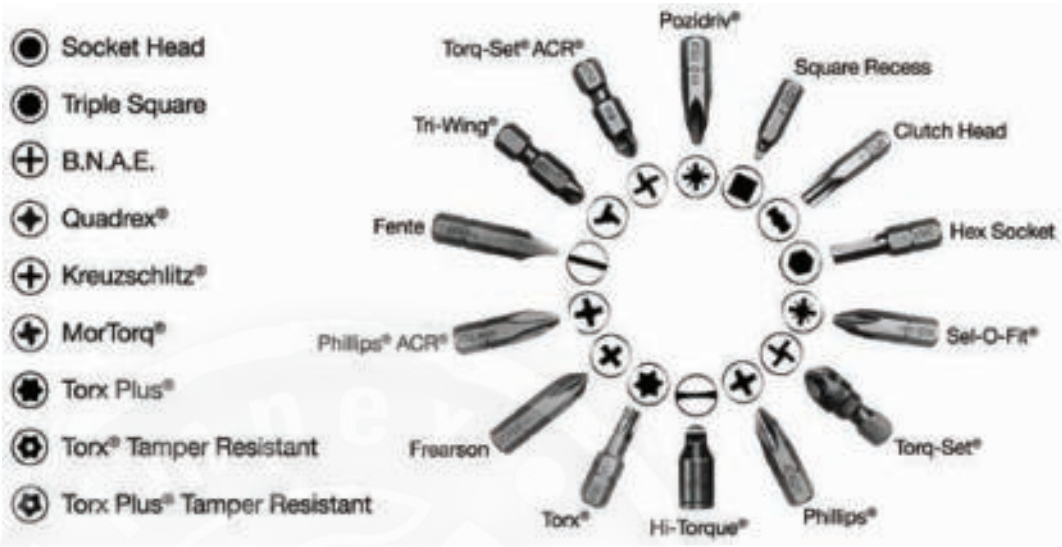

GLOBAL INDUSTRY LEADER

- Recognized as the global leader in premium, top-of-the-line fastener drive tools.
- Leader in covered products (U-Guard™ line), which enhance operator safety and reduce marring on finished surfaces.
- Unparalleled product offering of 10000+ products.

SUPERIOR PRODUCT QUALITY

- Advanced engineering capabilities, proprietary raw materials, and consistent manufacturing.
- Apex fasteners significantly outlast the competition leading to reduced cost of ownership.
- Precision fit designs for greater torque transfer to the fastener, improving tool life.

ADVANCED TECHNOLOGY

- Latest solid modeling and FEA tools used in product design.
- ISO 9001 / AS9100-certified quality management system at manufacturing plant.
- Latest CNC equipment utilized in manufacturing.

CUSTOM SOLUTIONS CAPABILITY

- The "Go-To" company for customized, hard-to-make products.
- Designed for superior strength and longevity, with quick turnaround times.
- Hundreds of custom solutions developed for aerospace applications.

SUPPORT WHEN YOU NEED IT

- Dedicated application specialists and customer service representatives available.
- 24/7 production with the capability to respond in real-time, and help support you to prevent downtime.

Registered trademarks: HI-TORQUE. Voi-Shan; TORX. Camcar Division of Acument; ACR. POZIDRIV. TORQ-SET and TRI-WING. Phillips International Co.; SUPADRIV. EIS (Fasteners) LTD.; SEL-O-FIT. FLIP-TIP. and Apex. Apex Tool Group. LLC.

Your Fastening Tool Expert

SOCKET HEAD INSERT BITS (1/4 in HEX) - METRIC

- For internal hexagon and adjusting screws.

PART NUMBER	SIZE mm	OVERALL LENGTH mm
185-1.5mm	1.5 mm	25
185-2mm	2 mm	25
185-2.5mm	2.5 mm	25
185-3mm	3 mm	25
185-4mm	4 mm	33
185-5mm	5 mm	33

1/4 in HEX POWER DRIVE NUTSETTERS

PART NUMBER	PART NUMBER MAGNETIC	SIZE mm	OVERALL LENGTH mm	SOCKET DIAMETER mm
6N-08-8M-3	M6N-08-8M-3	8	76	12.7
6N-08-8M-4	M6N-08-8M-4	8	102	12.7
6N-08-8M-6	M6N-08-8M-6	8	152	12.7
6N-08-10M-3	M6N-08-10M-3	10	76	14.3
6N-08-10M-4	M6N-08-10M-4	10	102	14.3
6N-08-10M-6	M6N-08-10M-6	10	76	14.3
6N-08-12M-3	M6N-08-12M-3	12	76	19.0
6N-08-12M-4	M6N-08-12M-4	12	102	19.0
6N-08-12M-6	M6N-08-12M-6	12	152	19.0

HEX EXTENSIONS

PART NUMBER	HEX in	TYPE OF LOCKING	OVERALL LENGTH mm
HEX DRIVE WITH 1/2 in MALE SQUARE DRIVE			
EX-501-3	7/16	Pin	76
EX-501-4	7/16	Pin	102
EX-501-6	7/16	Pin	152
HEX DRIVE WITH 3/8 IN MALE SQUARE DRIVE			
EX-371-3	7/16	Pin	76
EX-371-4	7/16	Pin	102
EX-371-6	7/16	Pin	152
HEX DRIVE WITH 1/4 in MALE SQUARE DRIVE			
EX-250-2	1/4	Pin	51
EX-250-3	1/4	Pin	76
EX-250-4	1/4	Pin	102
EX-250-6	1/4	Pin	152
EX-370	3/8	Pin	41
EX-370-3	3/8	Pin	76
EX-500-2	1/2	Pin	51
EX-500-3	1/2	Pin	76

TRIPLE SQUARE BITS

- 1/4 in Hex Power Drive

PART NUMBER	SIZE	OVERALL LENGTH	
		in	mm
49-TSQ-4M	4 mm	2	50
49-TSQ-5M	5 mm	2	50
49-TSQ-6M	6 mm	2	50
49-TSQ-8M	8 mm	2	50
49-TSQ-10M	10 mm	2	50
49-TSQ-12M	12 mm	2	50

** Not all parts displayed. Please go to www.Apex-Tools.com for complete listing.*

APEX®
Your Fastening Tool Expert

PHILLIPS® BITS

- 1/4 in Hex Insert Drive

PART NUMBER	SIZE	OVERALL LENGTH		
		in	mm	
440-1X	1	1	25	
440-12X	1	2	51	
440-13X	1	3	76	
440-2X	2	1	25	
440-2I	2	1	25	
440-22X	2	2	51	
440-26X	2	6	152	
440-3X	3	1	25	
440-3I	3	1	25	
440-3BNX	3	1 1/4	32	Reinforced version
440-32X	3	2	51	
440-4X	4	1 5/16	33	

SLOTTED BITS

- 1/4 in Hex Insert Bits

PART NUMBER	SCREW SIZE	TOTAL LENGTH		BLADE THICKNESS		BLADE WIDTH	
		in	mm	in	mm	in	mm
445-1X	4F-5R	1	25	0.034	0.86	3/16	4.8
445-2X	6F-8R	1	25	0.040	1.02	7/32	5.6
445-3X	8F-10R	1	25	0.042	1.07	1/4	6.4
445-4X	10F-12R	1	25	0.046	1.17	9/32	7.1
445-1-15X	4F-5R	1 1/2	38	0.034	0.86	3/16	4.8
445-2-15X	6F-8R	1 1/2	38	0.040	1.02	7/32	5.6
445-3-15X	8F-10R	1 1/2	38	0.042	1.07	1/4	6.4
445-4-15X	10F-12R	1 1/2	38	0.046	1.17	9/32	7.1
445-5X	12F-14R	1 1/2	38	0.050	1.27	5/16	7.9
445-6X	14F-16R	1 1/2	38	0.055	1.40	23/64	9.1

1/4 in HEX POWER BITS

PART NUMBER	SIZE	TOTAL LENGTH		SHANK DIAMETER		TURNED LENGTH	
		in	mm	in	mm	in	mm
4910X	0	1 15/16	49	1/8	3.2	1 1/4	32
491X	1	1 15/16	49	3/16	4.8	1 1/4	32
491-AX	1	2 3/4	70	3/16	4.8	2	51
491-BX	1	3 1/2	89	3/16	4.8	2 3/4	70
491-CX	1	6	152	3/16	4.8	2	51
492X	2	1 15/16	49	1/4	6.4	1 1/4	32
492I	2	1 15/16	49	1/4	6.4	1 1/4	32
492-AX	2	2 3/4	70	1/4	6.4	2	51
492-AI	2	2 3/4	70	1/4	6.4	2	51
492-BX	2	3 1/2	89	1/4	6.4	2 3/4	70
492-BI	2	3 1/2	89	1/4	6.4	2 3/4	70
492-CX	2	6	152	1/4	6.4	2	51
492-CI	2	6	152	1/4	6.4	2	51
492-200MM	2	7 13/16	200	1/4	6.4	7	178
493X	3	1 15/16	49	5/16	7.9	1	25
493-AX	3	2 3/4	70	5/16	7.9	1 3/4	44
493-BX	3	3 1/2	89	5/16	7.9	2 1/2	64
493-CX	3	6	152	5/16	7.9	5	127
494X	4	1 15/16	49	3/8	9.5	1	25

TORX® BITS

- 1/4 in Hex Insert Bits

PART NUMBER	TORXALIGN® PART NUMBER	DRIVER SIZE		OVERALL LENGTH	
				in	mm
440-TX-05X	-	T-5	0.055	1	25
440-TX-06X	-	T-6	0.065	1	25
440-TX-07X	-	T-7	0.077	1	25
440-TX-08X	-	T-8	0.090	1	25
440-TX-09X	-	T-9	0.097	1	25
440-TX-10X	440-TX-10-W	T-10	0.107	1	25
440-TX-15X	440-TX-15-W	T-15	0.128	1	25
440-TX-15-125	-	T-15	0.128	1 1/4	32
440-TX-20X	440-TX-20-W	T-20	0.151	1	25
440-TX-20-125	-	T-20	0.151	1 1/4	32
440-TX-20-2	-	T-20	0.151	2	51
440-TX-25X	440-TX-25-W	T-25	0.173	1	25
440-TX-27X	440-TX-27-W	T-27	0.195	1	25
440-TX-30X	440-TX-30-W	T-30	0.216	1	25
440-TX-40X	440-TX-40-W	T-40	0.260	1	25
440-TX-40I	440-TX-40-W	T-40	0.260	1	25
440-TX-45X*	-	T-45	0.306	1 1/4	32
440-TX-50X*	-	T-50	0.346	1 1/4	32

* Hex will break before rated ultimate torque of the Torx® point is met.

Your Fastening Tool Expert

TORQ-SET® BITS

- 1/4 in Hex Insert Bits

PART NUMBER	DRIVER SIZE	OVERALL LENGTH	
		in	mm
212-0	0	1	25
212-1	1	1	25
212-2	2	1	25
212-3	3	1	25
212-4	4	1	25
212-5	5	1	25
212-6	6	1	25
212-8	8	1	25
212-10	10	1	25
212-1/4	1/4	1	25

TORX® BITS

- 1/4 in Hex Power Drive

PART NUMBER COMPLETE ASSEMBLY	DRIVER SIZE	A	SHANK DIAMETER		TOTAL LENGTH	
			in	mm	in	mm
49-TX-05	T-5	0.055	0.119	3.0	1 15/16	49
49-TX-06	T-6	0.065	0.119	3.0	1 15/16	49
49-TX-07	T-7	0.077	0.119	3.0	1 15/16	49
49-TX-08	T-8	0.090	0.119	3.0	1 15/16	49
49-TX-09	T-9	0.097	0.119	3.0	1 15/16	49
49-TX-10	T-10	0.107	0.150	3.8	1 15/16	49
49-TX-15	T-15	0.128	0.150	3.8	1 15/16	49
49-TX-20	T-20	0.151	0.171	4.3	1 15/16	49
49-TX-25	T-25	0.173	0.193	4.9	1 15/16	49
49-TX-27	T-27	0.195	0.215	5.5	1 15/16	49
49-TX-30	T-30	0.216	0.236	6.0	1 15/16	49
49-TX-40	T-40	0.260	0.309	7.8	1 15/16	49

Torx® and Torxalign® are registered trademarks of the Camcar Division of Acument

TORQ-SET® BITS

- 1/4 in Hex Power Drive

PART NUMBER	DRIVER SIZE	OVERALL LENGTH	
		in	mm
170-0	0	1 1/4	32
273-0	0	1 15/16	49
273B-0	0	2 3/4	70
265-0	0	3 1/2	89
265A-0	0	6	152
170-1	1	1 1/4	32
273A-1	1	1 13/16	46
273-1	1	1 15/16	49
273B-1	1	2 3/4	70
265-1	1	3 1/2	89
265A-1	1	6	152
170-2	2	1 1/4	32
273A-2	2	1 13/16	46
273-2	2	1 15/16	49
273B-2	2	2 3/4	70
265-2	2	3 1/2	89
265A-2	2	6	152
170-3	3	1 1/4	32
273A-3	3	1 13/16	46
273-3	3	1 15/16	49
273B-3	3	2 3/4	70
265-3	3	3 1/2	89
265A-3	3	6	152
170-4	4	1 1/4	32
273A-4	4	1 13/16	46
273-4	4	1 15/16	49
273B-4	4	2 3/4	70
265-4	4	3 1/2	89
265A-4	4	6	152
170-5	5	1 1/4	32
273-5	5	1 15/16	49
273B-5	5	2 3/4	70
265-5	5	3 1/2	89
265A-5	5	6	152
170-6	6	1 1/4	32
170-6-ACR*	6	1 1/4	32
273A-6	6	1 13/16	46
273-6	6	1 15/16	49
273B-6	6	2 3/4	70
265-6	6	3 1/2	89
265A-6	6	6	152
170-8	8	1 1/4	32
170-8-ACR*	8	1 1/4	32
273A-8	8	1 13/16	46
273-8	8	1 15/16	49
273B-8	8	2 3/4	70
265-8	8	3 1/2	89
265A-8	8	6	152
170-10	10	1 1/4	32
170-10-ACR*	10	1 1/4	32
273A-10	10	1 13/16	46
273-10	10	1 15/16	49
273B-10	10	2 3/4	70
265-10	10	3 1/2	89
265A-10	10	6	152
170-1/4B	1/4	1 1/4	32
170-5/16B	5/16	1 1/4	32
170-3/8B	3/8	1 1/4	32

*Feature ACR® anti-camout ribs.

** Not all parts displayed. Please go to www.Apex-Tools.com for complete listing.*

HI-TORQUE® BITS

- 1/4 in Square Drive Bits

PART NUMBER	RECESS SIZE	OVERALL LENGTH	BODY DIAMETER	BLADE THICKNESS	BLADE WIDTH
		in	in	in	in
HTS-0	0	1	1/2	0.029	0.167
HTS-1	1	1	1/2	0.049	0.274
HTS-2	2	1	1/2	0.059	0.295
HTS-3	3	1	1/2	0.059	0.377
HTS-4	4	1	1/2	0.073	0.502

3/8 in SQUARE DRIVE BITS

PART NUMBER	RECESS SIZE	OVERALL LENGTH	BODY DIAMETER	BLADE THICKNESS	BLADE WIDTH
		in	in	in	in
HTS-3A	3	1 1/4	3/4	0.059	0.377
HTS-4A	4	1 1/4	3/4	0.073	0.502
HTS-5	5	1 1/4	3/4	0.079	0.629
HTS-6	6	1 1/4	3/4	0.095	0.745

1/2 in SQUARE DRIVE BITS

PART NUMBER	RECESS SIZE	OVERALL LENGTH	BODY DIAMETER	BLADE THICKNESS	BLADE WIDTH
		in	in	in	in
HTS-7	7	1 5/8	1	0.112	0.884
HTS-8	8	1 5/8	1	0.142	0.995
HTS-9	9	1 5/8	1 1/4	0.162	1.136
HTS-10	10	1 5/8	1 1/4	0.182	1.250
HTS-12	12	2 3/8	1 1/4	0.216	1.500

1/4 in HEX INSERT BITS

PART NUMBER	RECESS SIZE	OVERALL LENGTH	BODY DIAMETER	BLADE THICKNESS	BLADE WIDTH
		in	in	in	in
HTN-B-1	1	1 1/4	9/32	0.049	0.274
HTN-B-2	2	1 1/4	5/16	0.059	0.295
HTN-B-3	3	1 1/4	3/8	0.059	0.377
HTN-B-4	4	1 1/4	1/2	0.073	0.502

TRI-WING® BITS

- 5/16 in Hex Insert Bits

PART NUMBER	RECESS SIZE	SCREW SIZE TENSION HEAD	SCREW SIZE SHEAR HEAD	OVERALL LENGTH	
				in	mm
TWE-4	4	8-32	10-32	1 1/4	32
TWE-5	5	10-32	1/4-28	1 1/4	32

1/4 in HEX POWER DRIVE

PART NUMBER	RECESS SIZE	SCREW SIZE TENSION HEAD	SCREW SIZE SHEAR HEAD	OVERALL LENGTH	
				in	mm
TW-0	0	0-80	-	1 1/4	32
TW-1	1	2-56	4-40	1 1/4	32
TW-2	2	4-40	6-32	1 1/4	32
TW-3	3	6-32	8-32	1 1/4	32
TW-4	4	8-32	10-32	1 1/4	32
TW-5	5	10-32	1/4-28	1 1/4	32
TWB-6	6	1/4-28	5/16-24	1 1/2	38
TWB-7	7	5/16-24	3/8-24	1 1/2	38
TWB-8	8	3/8-24	7/16-20	1 1/2	38

5/16 in HEX POWER DRIVE

PART NUMBER	RECESS SIZE	SCREW SIZE TENSION HEAD	SCREW SIZE SHEAR HEAD	OVERALL LENGTH	
				in	mm
TWA-6	6	1/4-28	5/16-24	1 1/2	38
TWA-7	7	5/16-24	3/8-24	1 1/2	38
TWA-8	8	3/8-24	7/16-20	1 1/2	38

1/4 in HEX INSERT BITS

PART NUMBER	SIZE	SIZE TENSION HEAD	SIZE SHEAR HEAD	TOTAL LENGTH	
				in	mm
TWD-0	0	0-80	-	1	25
TWD-1	1	2-56	4-40	1	25
TWD-2	2	4-40	6-32	1	25
TWD-3	3	6-32	8-32	1	25
TWD-4	4	8-32	10-32	1	25
TWD-5	5	10-32	1/4-28	1	25
TWD-6	6	1/4	5/16	1	25
TWD-7	7	5/16	3/8	1	25

Your Fastening Tool Expert

U-GUARD SOCKETS

- Includes socket and sleeve

PART NUMBER	SOCKET	DRIVE END			SOCKET LENGTH	FASTENER END			FEATURES*
		Size	Type	Sex		Size	Type	Sex	
UG-10MM21	10MM21	1/4	Square	F	Standard	10 mm	Hex	F	FS
UG-M-10MM21	M-10MM21	1/4	Square	F	Standard	10 mm	Hex	F	FS. M
UG-MB-10MM21	MB-10MM21	1/4	Square	F	Standard	10 mm	Hex	F	FS. M. B
UG-10MM13	10MM13	3/8	Square	F	Standard	10 mm	Hex	F	FS
UG-M-10MM13	M-10MM13	3/8	Square	F	Standard	10 mm	Hex	F	FS. M
UG-10MM23	10MM23	3/8	Square	F	Long	10 mm	Hex	F	FS
UG-M-10MM23	M-10MM23	3/8	Square	F	Long	10 mm	Hex	F	FS. M
UG-MB-10MM23	MB-10MM23	3/8	Square	F	Long	10 mm	Hex	F	FS. M. B
UG-13MM23	13MM23	3/8	Square	F	Long	13 mm	Hex	F	FS
UG-M-13MM23	M-13MM23	3/8	Square	F	Long	13 mm	Hex	F	FS. M
UG-MB-13MM23	MB-13MM23	3/8	Square	F	Long	13 mm	Hex	F	FS. M. B
UG-13MM25	13MM25	1/2	Square	F	Long	13 mm	Hex	F	FS
UG-SF-13MM25	SF-13MM25	1/2	Square	F	Long	13 mm	Hex	F	FS. SF
UG-15MM25	15MM25	1/2	Square	F	Long	15 mm	Hex	F	FS
UG-SF-15MM25	SF-15MM25	1/2	Square	F	Long	15 mm	Hex	F	FS. SF
UG-18MM25	18MM25	1/2	Square	F	Long	18 mm	Hex	F	FS
UG-SF-18MM25	SF-18MM25	1/2	Square	F	Long	18 mm	Hex	F	FS. SF

U-GUARD EXTENSIONS

- Includes extension and sleeve

MODEL NUMBER	EXTENSION	DRIVE END			EXTENSION LENGTH	FASTENING END			FEATURES*
		Size	Type	Sex		Size	Type	Sex	
UG-EX-250-2	EX-250-2	1/4	Hex	M	2	1/4	Square	A	FS
UG-EX-250-4	EX-250-4	1/4	Hex	M	4	1/4	Square	A	FS
UG-EX-250-6	EX-250-6	1/4	Hex	M	6	1/4	Square	A	FS
UG-EX-370-2	EX-370-2	1/4	Hex	M	2	3/8	Square	A	FS
UG-EX-370-4	EX-370-4	1/4	Hex	M	4	3/8	Square	A	FS
UG-EX-370-6	EX-370-6	1/4	Hex	M	6	3/8	Square	A	FS
UG-EX-376-3	EX-376-3	3/8	Square	F	3	3/8	Square	A	FS
UG-EX-376-6	EX-376-6	3/8	Square	F	6	3/8	Square	A	FS
UG-EX-376-12	EX-376-12	3/8	Square	F	12	3/8	Square	A	FS
UG-EX-508-4	EX-508-4	1/2	Square	F	4	1/2	Square	A	FS
UG-EX-508-8	EX-508-8	1/2	Square	F	8	1/2	Square	A	FS
UG-EX-508-12	EX-508-12	1/2	Square	F	12	1/2	Square	A	FS

U-GUARD BIT HOLDERS

- Includes bit holder and sleeve

MODEL NUMBER	BIT HOLDER	DRIVE END			BIT HOLDER LENGTH	FASTENING END			FEATURES*
		Size	Type	Sex		Size	Type	Sex	
UG-M-490	M-490	1/4	Hex	M	2 31/32	1/4	Hex	F	FS. M. ET
UG-M-490-2	M-490-2	1/4	Hex	M	2	1/4	Hex	F	FS. M. ET
UG-838	838	3/8	Square	F	1 1/2	1/4	Hex	F	FS. ET
UG-M-838	M-838	3/8	Square	F	2 5/8	1/4	Hex	F	FS. M. ET
UG-835	835	3/8	Square	F	1 1/2	5/16	Hex	F	FS. ET
UG-M-835	M-835	3/8	Square	F	2 3/4	5/16	Hex	F	FS. M. ET
UG-855	855	1/2	Square	F	1 1/2	5/16	Hex	F	FS. ET
UG-M-855	M-855	1/2	Square	F	2 3/4	5/16	Hex	F	FS. M. ET
UG-QR-308	QR-308	3/8	Square	F	1 3/4	1/4	Hex	F	FS. QR
UG-QR-508	QR-508	1/2	Square	F	2 1/8	1/4	Hex	F	FS. QR
UG-QR-314	QR-314	3/8	Square	F	2	7/16	Hex	F	FS. QR
UG-QR-514	QR-514	1/2	Square	F	2 1/8	7/16	Hex	F	FS. QR

Features -

FS Free Spinning: Tool rotates independent of sleeve.
M Magnetic: Tool is equipped with magnet that keeps the fastener in position during tightening.
B Bolt Clearance: Tool is sprung so that bolts or nuts can withdraw into the socket.
SF Surface Drive: Tool has special hex shape so that bolts and nuts are easier to insert.
ET Extended Tip: Sleeve protrudes beyond the end of the bit holder and protects most of the standard insert. ** The tip of the insert bit is free and in this way guarantees a better connection.
QR Quick Release: Tool has a clamping device so that bits can be changed quickly and easily. The sleeve does not protrude beyond the end of the bit holder.
** Bit holder sleeves can be used with 1 in / 25 mm or 1 1/4 in / 32 mm long inserts. Tips of the sleeve can be changed to suit the requirements or as required.
Sleeves can be cut to the required length or heated and adapted to the shape of the bolt head.
NOTES: Lengths stated apply for core length without sleeves. If not otherwise stated. the sleeve can protrude up to 2 mm beyond the end of the tool.

Can't find the tool you need? Contact your Apex distributor, our customer service, or refer to our website www.Apex-Tools.com. In the majority of cases we can supply the item required as a special item. If necessary, our team of experts will develop and produce custom solutions to suit your requirements.

UNIVERSAL WRENCH ADAPTERS

- 3/8 in square drive
- Extension
- Male square to female square

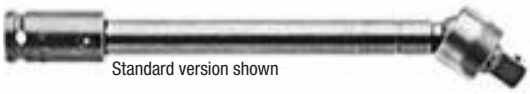
Standard version shown

PART NUMBER STANDARD	PART NUMBER TENSION TYPE	MALE SQUARE in	FEMALE SQUARE in	TYPE OF LOCKING	LARGEST DIAMETER mm
KAM-37-3	KDM-37-3	3/8	3/8	Pin	19
---	KDM-37-6	3/8	3/8	Pin	19
---	KDM-37-B-3	3/8	3/8	Ball	19
KAM-38-6	KDM-38-6	3/8	3/8	Pin	22

Standard lengths are 3 in, 6 in, 9 in and 12 in (76, 152, 229 and 305 mm).

UNIVERSAL WRENCH - METRIC

- 3/8 in square drive
- Extension
- Hex
- Standard and with tension

Tension type
Standard

PART NUMBER STANDARD	PART NUMBER TENSION TYPE	ACROSS FLATS WIDTH mm	SHANK LENGTH A	SOCKET LENGTH B	DIA. SOCKET C	DIA. SOCKET END D	ACROSS FLATS DEPTH E
KA-6-10m-4	---	10	102	20.6	19.1	15.1	9.5
KA-6-10m-6	KD-6-10m-6	10	152	20.6	19.1	15.1	9.5
KA-6-10m-9	KD-6-10m-9	10	229	20.6	19.1	15.1	9.5
---	KD-7-11m-6	11	152	23.8	22.2	15.9	10.3
KA-7-12m-4	---	12	102	23.8	22.2	17.5	10.3
KA-7-12m-6	KD-7-12m-6	12	152	23.8	22.2	17.5	10.3
KA-7-13m-3	---	13	76	25.4	22.2	17.5	11.9
KA-7-13m-4	---	13	102	25.4	22.2	17.5	11.9
KA-7-13m-6	KD-7-13m-6	13	152	25.4	22.2	17.5	11.9
KA-7-14m-6	KD-7-14m-6	14	152	27.0	22.2	19.1	13.5
---	KD-7-14m-9	14	229	27.0	22.2	19.1	13.5
KA-8-15m-3	---	15	76	28.6	25.4	19.8	14.3
---	KD-8-15m-6	15	152	28.6	25.4	19.8	14.3

SOCKETS - METRIC

- 3/8 in square drive
- Magnetic
- Thin wall
- Standard length

PART NUMBER FIXED MAGNET	ACROSS FLATS WIDTH mm	OVERALL LENGTH A	DIAMETER SOCKET END B	DIAMETER DRIVE END C	ACROSS FLATS DEPTH D
M-8mm43	8	31.7	12.7	19.1	4.8
M-10mm43	10	31.7	15.1	19.1	6.4
M-11mm43	11	38.1	15.9	19.1	7.2
M-12mm43	12	38.1	17.5	19.1	7.2
M-13mm43	13	38.1	19.1	19.1	8.7
M-14mm43	14	38.1	19.8	20.6	11.1
M-15mm43	15	38.1	20.5	20.6	11.1

** Not all parts displayed. Please go to www.Apex-Tools.com for complete listing.*

SOCKETS - METRIC

- 1/2 in square drive
- Hex. double hex
- Standard length

PART NUMBER HEX	PART NUMBER DOUBLE SQUARE	ACROSS FLATS WIDTH mm	OVERALL LENGTH A	DIAMETER SOCKET END B	DIAMETER DRIVE END C	ACROSS FLATS DEPTH D
10mm15	10mm15-D	10	38.1	16.7	23.8	6.4
11mm15	11mm15-D	11	38.1	17.5	23.8	7.2
12mm15	12mm15-D	12	38.1	19.1	23.8	7.2
13mm15	13mm15-D	13	38.1	22.2	23.8	8.7
14mm15	14mm15-D	14	38.1	22.2	23.8	11.1
15mm15	15mm15-D	15	38.1	23.8	23.8	11.1
16mm15	16mm15-D	16	38.1	25.4	25.4	11.1
17mm15	17mm15-D	17	38.1	28.6	28.6	11.1
18mm15	18mm15-D	18	38.1	28.6	28.6	11.1
19mm15	19mm15-D	19	38.1	28.6	28.6	11.9
20mm15	---	20	38.1	31.7	31.7	11.9
21mm15	21mm15-D	21	38.1	31.7	31.7	13.5
22mm15	22mm15-D	22	38.1	33.3	33.3	14.3
23mm15	23mm15-D	23	38.1	34.9	34.9	15.9
24mm15	24mm15-D	24	38.1	34.9	34.9	15.9

SOCKETS - METRIC

- 1/4 in square drive
- Hex. double hex
- Standard length

PART NUMBER HEX	PART NUMBER DOUBLE HEX	ACROSS FLATS WIDTH mm	OVERALL LENGTH A	DIAMETER SOCKET END B	DIAMETER DRIVE END C	ACROSS FLATS DEPTH D
3.5mm11	---	3.5	22.2	6.4	12.7	2.4
4mm11	---	4	22.2	6.4	12.7	2.4
4.5mm11	---	4.5	22.2	7.9	12.7	2.4
5mm11	---	5	22.2	8.7	12.7	3.9
5.5mm11	---	5.5	22.2	9.5	12.7	3.9
6mm11	6mm11-D	6	22.2	9.5	12.7	3.9
7mm11	7mm11-D	7	22.2	11.1	12.7	4.8
8mm11	8mm11-D	8	25.4	12.7	12.7	4.8
9mm11	9mm11-D	9	25.4	14.3	14.3	4.8
10mm11	10mm11-D	10	25.4	15.9	15.9	6.4
OS-10mm11	---	10	25.4	14.3	14.3	6.4
11mm11	11mm11-D	11	25.4	15.9	15.9	7.2
12mm11	12mm11-D	12	25.4	17.5	17.5	7.2
13mm11	13mm11-D	13	25.4	19.1	19.1	8.7
14mm11	14mm11-D	14	25.4	20.6	20.6	11.1
15mm11	---	15	25.4	22.2	22.2	11.1
16mm11	---	16	25.4	22.2	22.2	11.1

INDEX

MODEL	PAGE
A14T	4
A14V	4
A16T	4
A16V	4
A24T	2
A24V	2
A26T	2
A26V	2
CD14	14
CD15	14
CD1V	14
CD24	14
CD25	14
CD2V	14
EX-250-2	149
EX-250-2	153
EX-250-3	149
EX-250-4	149
EX-250-4	153
EX-250-6	149
EX-250-6	153
EX-370	149
EX-370-2	153
EX-370-3	149
EX-370-4	153
EX-370-6	153
EX-371-3	149
EX-371-4	149
EX-371-6	149
EX-376-12	153
EX-376-3	153
EX-376-6	153
EX-500-2	149
EX-500-3	149
EX-501-3	149
EX-501-4	149
EX-501-6	149
EX-508-12	153
EX-508-4	153
EX-508-8	153
F4-PT-RT-B	120
FCB 14CFS288-BKBH	143
FCB 14CFS288-BKKE	143
FCB 14CN87-AKBK	143
FCB 14CN88-AAKF	143
FCB 14CN88-ADBH	143
FCB 14CN88-ADBJ	143
FCB 14CN88-AKBK	143
FCB 14CS88-AAKF	143
FCB 14CS88-ADBH	143
FCB 14CS88-ADBJ	143
FCB 15LN286-CAAK	144
FCB 15LN286-CDFA	144
FCB 15LN286-CDGB	144
FCB 15LN286-CDJH	144
FCB 15LN287-CDBJ	144

MODEL	PAGE
FCB 15LN287-CDGB	144
FCB 15LN287-CDJH	144
FCB 15LS286-CAAK	144
FCB 15LS286-CDFA	144
FCB 15LS288-EDBJ	144
HT3	16
HT4	16
HTN-B-1	152
HTN-B-2	152
HTN-B-3	152
HTN-B-4	152
HTS-0	152
HTS-1	152
HTS-10	152
HTS-12	152
HTS-2	152
HTS-3	152
HTS-3A	152
HTS-4	152
HTS-4A	152
HTS-5	152
HTS-6	152
HTS-7	152
HTS-8	152
HTS-9	152
KA-6-10m-4	154
KA-6-10m-6	154
KA-6-10m-9	154
KA-7-12m-4	154
KA-7-12m-6	154
KA-7-13m-3	154
KA-7-13m-4	154
KA-7-13m-6	154
KA-7-14m-6	154
KA-8-15m-3	154
KAM-37-3	154
KAM-38-6	154
KD-6-10m-6	154
KD-6-10m-9	154
KD-7-11m-6	154
KD-7-12m-6	154
KD-7-13m-6	154
KD-7-14m-6	154
KD-7-14m-9	154
KD-8-15m-6	154
KDM-37-3	154
KDM-37-6	154
KDM-37-B-3	154
KDM-38-6	154
M-10MM13	153
M-10MM21	153
M-10MM23	153
M-10mm43	154
M-11mm43	154
M-12mm43	154
M-13MM23	153

MODEL	PAGE
M-13mm43	154
M-14mm43	154
M-15mm43	154
M-490	153
M-490-2	153
M6N-08-10M-3	149
M6N-08-10M-4	149
M6N-08-10M-6	149
M6N-08-12M-3	149
M6N-08-12M-4	149
M6N-08-12M-6	149
M6N-08-8M-3	149
M6N-08-8M-4	149
M6N-08-8M-6	149
M-835	153
M-838	153
M-855	153
M-8mm43	154
MB-10MM21	153
MB-10MM23	153
MB-13MM23	153
Mitis TM	22
MPRO400GC-M	132
MPRO400GC-P	132
MPRO400GC-S	132
MPRO400GC-SG	132
OS-10mm11	155
PA2-5XX	15
PA2-6XX	15
PA2-8XX	15
PA3-5XX	15
PA3-6XX	15
PA3-8XX	15
PA5-5XX	15
PA5-6XX	15
PA5-8XX	15
PAX-5XX	15
PAX-6XX	15
PAX-8XX	15
PB2-5XX	15
PB2-6XX	15
PB2-8XX	15
PB3-5XX	15
PB3-6XX	15
PB3-8XX	15
PB5-5XX	15
PB5-6XX	15
PB5-8XX	15
PBX-5XX	15
PBX-6XX	15
PBX-8XX	15
QR-308	153
QR-314	153
QR-508	153
QR-514	153
QRA-08	46

MODEL	PAGE
RB 1130	41
RB 1130-2	41
RB40-60	100
RB40-60	100
RB40-85	100
RB40-85	100
RB41	102
RB41	102
RB42	102
RB42	102
RB43	100
RB43	100
RB44-60	100
RB44-60	100
RC-10015020	56
RC-10015020W	56
RC-10025010	61
RC-10025010W	60
RC-10025015	61
RC-10025015W	60
RC-60001005	118
SF-13MM25	153
SF-15MM25	153
SF-18MM25	153
TCB 19SCA06-CDBJ	146
TCB 19TTA15Q-ADCJ	145
TCB 24RAA23-CDHH	146
TCB 88RSAL-5-CDCJ	146
TCB 88RSATP-2-ADCJ	145
TCB 88RSATP-5-ADCJ	145
TW-0	152
TW-1	152
TW-2	152
TW-3	152
TW-4	152
TW-5	152
TWA-6	152
TWA-7	152
TWA-8	152
TWB-6	152
TWB-7	152
TWB-8	152
TWD-0	152
TWD-1	152
TWD-2	152
TWD-3	152
TWD-4	152
TWD-5	152
TWD-6	152
TWD-7	152
TWE-4	152
TWE-5	152
UG-10MM13	153
UG-10MM21	153
UG-10MM23	153
UG-13MM23	153

INDEX

MODEL	PAGE
UG-13MM25	153
UG-15MM25	153
UG-18MM25	153
UG-835	153
UG-838	153
UG-855	153
UG-EX-250-2	153
UG-EX-250-4	153
UG-EX-250-6	153
UG-EX-370-2	153
UG-EX-370-4	153
UG-EX-370-6	153
UG-EX-376-12	153
UG-EX-376-3	153
UG-EX-376-6	153
UG-EX-508-12	153
UG-EX-508-4	153
UG-EX-508-8	153
UG-M-10MM13	153
UG-M-10MM21	153
UG-M-10MM23	153
UG-M-13MM23	153
UG-M-490	153
UG-M-490-2	153
UG-M-835	153
UG-M-838	153
UG-M-855	153
UG-MB-10MM21	153
UG-MB-10MM23	153
UG-MB-13MM23	153
UG-QR-308	153
UG-QR-314	153
UG-QR-508	153
UG-QR-514	153
UG-SF-13MM25	153
UG-SF-15MM25	153
UG-SF-18MM25	153
835	153
838	153
855	153
21502	14
33633	46
863806	46
863810	46
1001252	46
1001505	46
1005078	46
1005180	46
1005182	46
1005183	46
1005184	46
1005185	46
1005186	46
1005187	46
1005188	46
1005681	46

MODEL	PAGE
1005682	46
1005684	46
1005871	46
1005872	46
1005873	46
1005875	46
1005876	46
1005926	46
1005927	46
1005977	46
1006001	46
1006035	46
1006395	46
1006408	46
1006412	46
1009726	46
1013904	46
1020699	46
1021289	38
1021291	38
1021292	38
1021620	38
1021620	38
1025313	38
1025314	38
1025409	38
1025476	38
1025477	38
1025528	38
1025668	38
1025694	38
1025696	38
1025730	38
1025731	38
1025733	38
1025780	38
10000010	51
10000100	51
10005000	52
10005001	52
10005050	52
10005051	52
10005200	52
10005250	52
10005305	52
10005306	52
10005355	52
10005356	52
10010001	54
10010010	54
10010015	54
10010016	54
10010110	54
10010111	54
10010115	54
10010116	54

MODEL	PAGE
10010205	54
10015001	56
10015010	56
10015015	56
10015016	56
10015021	56
10015200	56
10015550	58
10020001	63
10020010	63
10020015	63
10020016	63
10020021	63
10020060	63
10020065	63
10020070	63
10020105	63
10020106	63
10020110	63
10020111	63
10020115	63
10020116	63
10020155	63
10020160	63
10020165	63
10020166	63
10020200	63
10020250	63
10025001	61
10025016	61
10025105	61
10025110	61
10025111	61
10025116	61
10025117	61
10040050	64
10040050	65
10040210	65
10040250	65
10040260	65
10040405	65
10040455	65
10040505	65
10040555	65
10040650	65
10040720	65
10040730	65
10040740	65
10040750	65
10040760	65
10045050	66
10045050	67
10045210	67
10045250	67
10045260	67
10045405	67

MODEL	PAGE
10045455	67
10045505	67
10045555	67
10045650	67
10045720	67
10045730	67
10045740	67
10045750	67
10045760	67
10050000	68
10050050	68
10080005	44
10080010	44
10080015	44
10080020	44
10090000	43
10090050	43
10090055	43
10090100	43
10090150	43
30220001	77
30220001	77
30220001	77
30220005	77
30220010	77
30220015	77
30220101	77
30220101	77
30220101	77
30220101	77
30220110	77
30220115	77
30220120	77
30220215	77
30220301	77
30220301	77
30220310	77
30220315	77
30222001	77
30222001	77
30222001	77
30222001	77
30222001	77
30222001	77
30222015	77
30222025	77
30222030	77
30222040	77
30222050	77
30222055	77
30223001	77
30223001	77
30223035	77
30223040	77
30224001	77
30224001	77

INDEX

MODEL	PAGE
30224045	77
30224050	77
30320000	79
30320000	79
30320000	79
30320005	79
30320010	79
30320015	79
30320100	79
30320100	79
30320100	79
30320100	79
30320110	79
30320115	79
30320120	79
30320215	79
30320300	79
30320300	79
30320310	79
30320315	79
30322000	79
30322000	79
30322000	79
30322000	79
30322000	79
30322000	79
30322015	79
30322025	79
30322030	79
30322040	79
30322050	79
30322055	79
30323000	79
30323000	79
30323035	79
30323040	79
30324000	79
30324000	79
30324045	79
30324050	79
30500000	78
30500000	78
30500000	78
30500000	78
30500000	78
30500055	78
30500060	78
30500065	78
30500070	78
30500075	78
30500100	78
30500100	78
30500100	78
30500100	78
30500100	78
30500100	78

MODEL	PAGE
30500105	78
30500110	78
30500115	78
30500120	78
30500125	78
30500130	78
30500200	78
30500200	78
30500200	78
30500200	78
30500200	78
30500203	78
30500205	78
30500210	78
30500215	78
30500220	78
30500300	78
30500311	78
30502160	78
30503060	78
30503060	78
30503160	78
30503160	78
30503160	78
30503165	78
30503166	78
30503260	78
30600001	80
30600001	80
30600001	80
30600001	80
30600001	80
30600010	80
30600015	80
30600020	80
30600025	80
30600030	80
30600101	80
30600101	80
30600101	80
30600101	80
30600110	80
30600115	80
30600120	80
30600125	80
30601001	81
30601001	81
30601001	81
30601001	81
30601001	81
30601010	81
30601015	81
30601020	81
30601025	81
30601030	81
30601101	81

MODEL	PAGE
30601101	81
30601101	81
30601101	81
30601110	81
30601115	81
30601120	81
30601125	81
31000000	82
31000005	82
31000010	82
31000020	82
31000025	82
31000105	82
31000110	82
31000115	82
31000205	82
31000210	82
31000305	82
31000310	82
31000315	82
31000410	82
31000505	82
31000510	82
31000520	82
31001002	82
31001007	82
31001012	82
31001017	82
31001022	82
31001030	82
31001101	82
31001103	82
31001106	82
31001108	82
31001111	82
31001113	82
31001120	82
31001130	82
31001201	82
31001203	82
31001206	82
31001208	82
31001215	82
31001225	82
31001301	82
31001303	82
31001306	82
31001308	82
31001311	82
31001313	82
31001320	82
31001330	82
31001401	82
31001404	82
31001413	82
31001420	82

MODEL	PAGE
31001501	82
31001503	82
31001506	82
31001508	82
31001511	82
31001513	82
31001521	82
31001523	82
31001610	82
31001620	82
31100005	83
31100006	83
31100009	83
31100010	83
31100020	83
31100024	83
31100025	83
31100030	83
31100035	83
31100056	83
31100100	83
31100105	83
31100110	83
31100114	83
31100115	83
31100120	83
31100122	83
31100130	83
31100131	83
31100133	83
31100135	83
31100138	83
31100142	83
31100145	83
31100177	83
31100200	83
31100205	83
31100206	83
31100210	83
31100220	83
31100225	83
31100230	83
31100236	83
31100250	83
31100300	83
31100305	83
31100310	83
31100315	83
31100320	83
31100400	83
31100405	83
31100410	83
31100415	83
31100420	83
31100425	83
31100430	83

INDEX

MODEL	PAGE
31100440	83
31100444	83
31100445	83
31100446	83
31100455	83
31100460	83
31100478	83
31100515	83
31100520	83
31100586	83
31206000	74
31206005	74
31206010	74
31206015	74
31206020	74
31206025	74
31206030	74
31206035	74
31206040	74
31206045	74
31206100	74
31206105	74
31206110	74
31206120	74
31206125	74
31206200	74
31206300	74
31206305	74
31300000	86
31300025	86
31300050	86
31300125	86
31300150	86
31300200	86
31300250	86
31300300	86
31302035	86
31302060	86
31302135	86
31302160	86
31302210	86
31306000	86
31306025	86
31306050	86
31306150	86
31306225	86
31400000	87
31400004	87
31400005	87
31400015	87
31400020	87
31400100	87
31400105	87
31400110	87
31400115	87
31400125	87

MODEL	PAGE
31400200	87
31400210	87
31400300	87
31500035	84
31500065	84
31500095	84
31601000	84
31601025	84
31700000	85
31700005	85
31700200	85
31700210	85
31700300	85
31700310	85
31700315	85
31700325	85
32110055	97
32110056	97
32110057	97
32110058	97
32110059	97
32110060	97
32110061	97
32110062	97
32110063	97
32110064	97
32110065	97
32110066	97
32110067	97
32110068	97
32110069	97
32110070	97
32110071	97
32110072	97
32110073	97
32110074	97
32110075	97
32110076	97
32110077	97
32110078	97
32110079	97
32110080	97
32110081	97
32110082	97
32110083	97
32110097	97
32110098	97
32110102	97
32110103	97
32110119	97
32600000	93
32600005	93
32600050	93
32600055	93
32600100	93
32600105	93

MODEL	PAGE
32800100	88
32800200	88
32800205	88
32800260	88
32802100	88
32802200	88
32802205	88
32802260	88
32820010	92
32820110	92
33000020	96
33000025	96
33000030	96
33000040	96
33000132	96
33000240	96
33000248	96
33000625	96
33000632	96
33001005	96
33001010	96
33001015	96
33001020	96
33500104	95
33500187	95
33500206	95
33500207	95
33500301	95
33500305	95
33500306	95
33500404	95
33500504	95
33500536	95
33500537	95
33500627	95
33500657	95
33501707	95
33503108	95
33503228	95
33504104	95
33504105	95
33504204	95
33504205	95
33504224	95
33504304	95
33506100	95
40150520	110
40150530	110
60001000	118
60002005	117
60003000	116
60004000	119
60004001	119
60004005	119
60004008	119
60004010	119

MODEL	PAGE
60004015	119
60004016	119
60004017	119
60004501	119
60101010	100
60101020	100
60101110	100
60101120	100
60102010	102
60102110	102
60103010	102
60103110	102
60104010	100
60104110	100
60110010	100
60110011	100
60202005	106
60202005	106
60202005	111
60202010	106
60202010	106
60202010	111
60203006	106
60203016	106
60203106	106
60203116	106
60300006	110
60300011	110
60300106	106
60300111	106
60300206	106
60300211	106
60300520	110
60300530	110
60404005	106
60404005	106
60703005	113
60703020	113
60703040	113
60703055	113
60703075	113
60703095	113
60703205	113
60703220	113
60703240	113
60703255	113
60703275	113
60703295	113
60703405	113
60703420	113
60703440	113
60703455	113
60703475	113
60703495	113
60703505	113
60703520	113

INDEX

MODEL	PAGE
60703540	113
60703555	113
60703575	113
60703595	113
60703605	113
60703620	113
60703640	113
60703655	113
60703675	113
60703695	113
60711105	113
60711120	113
60711205	113
60711220	113
60713105	113
60713120	113
60713140	113
60713155	113
60713175	113
60713195	113
60713205	113
60713220	113
60713240	113
60713255	113
60713275	113
60713295	113
60713405	113
60713420	113
60713440	113
60713455	113
60713475	113
60713495	113
60713505	113
60713520	113
60713540	113
60713555	113
60713575	113
60713595	113
60713605	113
60713620	113
60713640	113
60713655	113
60713675	113
60713695	113
60713705	113
60713720	113
60713740	113
60713755	113
60713775	113
60713795	113
60723105	113
60723120	113
60723140	113
60723155	113
60723175	113
60723195	113

MODEL	PAGE
60723205	113
60723220	113
60723240	113
60723255	113
60723275	113
60723295	113
60723305	113
60723320	113
60723340	113
60723355	113
60723375	113
60723395	113
60723405	113
60723420	113
60723440	113
60723455	113
60723475	113
60723495	113
60723505	113
60723520	113
60723540	113
60723555	113
60723575	113
60723595	113
60723605	113
60723620	113
60723640	113
60723655	113
60723675	113
60723695	113
60751100	114
60751150	114
60771150	115
60771155	115
60771160	115
60802143	120
60802144	120
60802241	120
60802242	120
60802243	120
60802244	120
60802311	120
60802316	120
60802343	120
60802344	120
60901000	116
70110200	42
70110250	42
70110300	42
70110350	42
70110400	42
70110480	42
70110500	42
70110550	42
70110600	42
70110635	42

MODEL	PAGE
70110794	42
70110952	42
70300005	46
70300010	46
90030005	119
90510005	119
90510010	119
90510015	119
90520005	119
90520010	119
90830001	114
90830002	114
91217225	119
91825010	86
91825010	86
91825010	86
91825010	86
91825015	86
91825015	86
91825015	86
91825015	86
91825015	86
91825015	86
91825015	86
91825020	86
91825025	86
91825025	86
91825025	86
91825025	86
91825025	86
91825030	86
93060005	119
93060010	119
93080001	114
93080002	114
93201000	114
93201050	114
93201100	114
93201150	114
93201200	114
93201250	114
93430075	119
100300105	70
02084001PT	76
02084003PT	76
02084004PT	76
02084005PT	76
02084006PT	76
02084007PT	76
02084008PT	76
02084009PT	76
02084010PT	76
02084014PT	76
02084016PT	76
02084019PT	75
02084020PT	75

MODEL	PAGE
02084021PT	75
02084022PT	75
02084023PT	75
02084026PT	75
02084027PT	75
02084029PT	75
02084030PT	75
02084031PT	75
02084032PT	75
02084035PT	75
02084208PT	75
02110004PT	92
02500586PT	78
02500591PT	78
02500592PT	78
02500593PT	78
02504028PT	74
02504029PT	74
02504030PT	74
02504031PT	74
02504032PT	74
02504033PT	74
02504034PT	74
02504035PT	74
02504036PT	74
02504037PT	74
02504038PT	74
02504061PT	74
02504062PT	74
02504064PT	74
02504067PT	74
02504069PT	74
02506010PT	82
02506012PT	82
02506013PT	82
02506014PT	82
02506015PT	82
02506016PT	82
02506017PT	82
02506018PT	82
02506019PT	82
02506020PT	82
02506021PT	82
03590436PT	83
03590513PT	83
03596083PT	87
03910226PT	120
03910227PT	120
03910228PT	120
03910638PT	115
03910900PT	115
03911360PT	115
03911361PT	115
03911374PT	115
03911800PT	115
03911809PT	115

INDEX

MODEL	PAGE
03911810PT	115
03912760PT	120
03912761PT	120
03912762PT	120
03912769PT	120
10000010W	51
10000100W	51
10005000W	52
10005001W	52
10005050W	52
10005051W	52
10005200W	52
10005250W	52
10005305W	52
10005306W	52
10005355W	52
10005356W	52
10010001W	54
10010010W	54
10010015W	54
10010016W	54
10010110W	54
10010111W	54
10010115W	54
10010116W	54
10010205W	54
10015001W	56
10015010W	56
10015015W	56
10015016W	56
10015021W	56
10015200W	56
10015500PT	58
10015500W	58
10015550W	58
10020001W	62
10020010W	62
10020015W	62
10020016W	62
10020020PT	63
10020020W	62
10020021W	62
10020060W	62
10020065W	62
10020070W	62
10020105W	62
10020106W	62
10020110W	62
10020111W	62
10020115W	62
10020116W	62
10020155W	62
10020160W	62
10020165W	62
10020166W	62
10020200W	62

MODEL	PAGE
10020250W	62
10025001W	60
10025016W	60
10025105W	60
10025110W	60
10025111W	60
10025116W	60
10025117W	60
100300105W	70
10030010PT	70
10030010W	70
10040000PT	64
10040000PT	65
10040200PT	65
10040200W	64
10040210W	64
10040250W	64
10040260W	64
10040405W	64
10040455W	64
10040505W	64
10040555W	64
10040600PT	65
10040600W	64
10040650W	64
10040700PT	64
10040700PT	65
10040720W	64
10040730W	64
10040740W	64
10040750W	64
10040760W	64
10045000PT	66
10045000PT	67
10045200PT	67
10045200W	66
10045210W	66
10045250W	66
10045260W	66
10045405W	66
10045455W	66
10045505W	66
10045555W	66
10045600PT	67
10045600W	66
10045650W	66
10045700PT	66
10045700PT	67
10045720W	66
10045730W	66
10045740W	66
10045750W	66
10045760W	66
10050000W	68
10050050W	68
10120+Ø	72

MODEL	PAGE
10130+Ø	72
10mm11	155
10mm11-D	155
10MM13	153
10mm15	155
10mm15-D	155
10MM21	153
10MM23	153
10QNPD	18
10QNPDM	18
110PHH55Q	131
110PTHH30Q	131
11mm11	155
11mm11-D	155
11mm15	155
11mm15-D	155
11PHH652	131
11PHH653*	131
11PHH65Q	131
11PTHH352	131
11PTHH353*	131
11PTHH35Q	131
120-225	17
120PHH554	131
120PTHH304	131
120QP	14
12mm11	155
12mm11-D	155
12mm15	155
12mm15-D	155
135DPV-14B-50	34
135DPV-14B-51	34
135DPV-28B-51	34
135DPV-7B-43	34
135DPV-7B-50	34
136-112	17
136-150	17
13mm11	155
13mm11-D	155
13mm15	155
13mm15-D	155
13MM23	153
13MM25	153
14-0158	46
14-0168	46
14-0170	46
140PH45Q	131
140PTHC25Q	131
14-1094	46
14-1102	46
14-1104	46
14-1148	46
14-4302	122
14-4303	122
14-4306	122
14-4312	122

MODEL	PAGE
14-4316	122
14-4323	122
14-4324	122
14-4334	122
14-4363	122
14-4364	122
14-4372	122
14-4373	122
14-4374	122
14-4382	122
14-4383	122
14-4384	122
14-4385	122
14-4386	122
14-4387	122
14-4391	122
14-4392	122
14-4393	122
14-4394	122
14-4395	122
14-4396	122
14-4397	122
14-4401	122
14-4402	122
14-4403	122
14-4404	122
14-4405	122
14-4406	122
14-4410	122
14-4412	122
14-4422	122
14-4512	122
14-4513	122
14-4514	122
14-4516	122
14-4532	122
14-4533	122
14-4534	122
14-4572	122
14-4573	122
14-4574	122
14CFS60-95	122
14CFS60-98	122
14CFS90-38	32
14CFS90-40	32
14CFS90-51	32
14CFS91-38	32
14CFS91-40	32
14CFS91-51	32
14CFS92-38	32
14CFS92-40	32
14CFS92-51	32
14CFS93-38	32
14CFS93-40	32
14CFS93-51	32
14CFS94-38	32

INDEX

MODEL	PAGE
14CFS94-40	32
14CFS94-51	32
14CFS95-38	32
14CFS95-40	32
14CFS95-51	32
14CFS96-38	32
14CFS96-40	32
14CFS96-51	32
14CFS97-38	32
14CFS97-40	32
14CFS97-51	32
14CHL92-38	33
14CHL92-40	33
14CHL92-51	33
14CHL92-53	33
14CHL98-38	33
14CHL98-40	33
14CHL98-51	33
14CHL98-53	33
14CNL60-95	122
14CNL90-38	33
14CNL90-40	33
14CNL91-40	33
14CNL91-51	33
14CNL92-38	33
14CNL92-40	33
14CNL92-51	33
14CNL92-53	33
14CNL95-40	33
14CNL95-51	33
14CNL97-40	33
14CNL97-51	33
14CNL97-53	33
14CNL98-38	33
14CNL98-40	33
14CNL98-51	33
14CNL98-53	33
14CSL90-38	32
14CSL90-40	32
14CSL91-38	32
14CSL91-40	32
14CSL92-38	32
14CSL92-40	32
14CSL95-40	32
14CSL95-51	32
14CSL97-40	32
14CSL97-51	32
14CSL98-38	32
14CSL98-40	32
14mm11	155
14mm11-D	155
14mm15	155
14mm15-D	155
158-15QRHD	10
158-15QRHD-MCC	12
158-15QRHDV -	10

MODEL	PAGE
158-15QRVHD-MCC	12
158QR	10
158QRV -	10
15DP-1.6B-53	34
15DP-14B-49	34
15DP-4B-53	34
15DP-8B-53	34
15L1401-37	35
15L1470-37	35
15L1471-37	35
15L1487-32	35
15L1487-36	35
15L1487-38	35
15L1488-36	35
15L1488-38	35
15L1489-32	35
15L1489-36	35
15L1489-38	35
15L1489-51	35
15LF051-38	40
15LF052-38	40
15LF053-38	40
15LF054-38	40
15LF055-38	40
15LF080-38	40
15LF081-38	40
15LF081-40	40
15LF082-38	40
15LF082-40	40
15LF083-38	40
15LF083-40	40
15LF084-38	40
15LF085-38	40
15LF085-40	40
15LF086-38	40
15LF087-38	40
15LF087-40	40
15LF281-52	36
15LF281-62	35
15LF281Q	39
15LF282-52	36
15LF282-62	35
15LF282Q	39
15LF283-52	36
15LF283-62	35
15LF283Q	39
15LF284-52	36
15LF284-62	35
15LF284Q	39
15LF285-52	36
15LF285-62	35
15LF285Q	39
15LF286-52	36
15LF286-62	35
15LF286Q	39
15LF287-52	36

MODEL	PAGE
15LF287-62	35
15LF287Q	39
15LN281-52	37
15LN281-62	36
15LN281Q	39
15LN282-52	37
15LN282-62	36
15LN282Q	39
15LN283-52	37
15LN283-62	36
15LN283Q	39
15LN284-52	37
15LN284-62	36
15LN284Q	39
15LN285-52	37
15LN285-62	36
15LN285Q	39
15LN286-52	37
15LN286-62	36
15LN286Q	39
15LN287Q	39
15LN288-52	37
15LN288-62	36
15LS281-52	37
15LS281-62	36
15LS282-52	37
15LS282-62	36
15LS283-52	37
15LS283-62	36
15LS284-52	37
15LS284-62	36
15LS285-52	37
15LS285-62	36
15LS286-52	37
15LS286-62	36
15LS287-52	37
15LS287-62	36
15mm11	155
15mm15	155
15mm15-D	155
15MM25	153
15QRHD	10
15STHC40Q	131
15STHFC40Q	131
160PH456	131
160PTHC256	131
16mm11	155
16mm15	155
16mm15-D	155
170-0	151
170-1	151
170-1/4B	151
170-10	151
170-10-ACR*	151
170-2	151
170-3	151

MODEL	PAGE
170-3/8B	151
170-4	151
170-5	151
170-5/16B	151
170-6	151
170-6-ACR*	151
170-8	151
170-8-ACR*	151
17BPYPB05Q	135
17BPYPB07Q	135
17BPYPB09Q	135
17BPYPB13Q	135
17mm15	155
17mm15-D	155
180-225	17
185-1.5mm	149
185-2.5mm	149
185-2mm	149
185-3mm	149
185-4mm	149
185-5mm	149
18EAE08AL2	138
18EAE15AM3	138
18EAE22AM3	138
18EAE28AM3	138
18EPE06D2	139
18EPE06Q	139
18EPE12D3	139
18EPE12Q	139
18EPE17D3	139
18EPE17Q	139
18EPE22D3	139
18EPE31D3	139
18ESE06D2	140
18ESE06Q	140
18ESE12D3	140
18ESE12Q	140
18ESE17D3	140
18ESE17Q	140
18ESE22D3	140
18ESE31D3	140
18mm15	155
18mm15-D	155
18MM25	153
19BPA02Q	124
19BPA03Q	124
19BPA04Q	124
19BPA05Q	124
19BPA06Q	124
19mm15	155
19mm15-D	155
19PCA02Q	129
19PCA03Q	129
19PCA04Q	129
19PCA05Q	129
19PCA06Q	129

INDEX

MODEL	PAGE
19PCA07Q	129
19PCA09Q	129
19PTA02Q	129
19PTA03Q	129
19PTA04Q	129
19PTA05Q	129
19PTA06Q	129
19PTA07Q	129
19PTA09Q	129
19PTA15Q	129
19PTS02Q	129
19PTS03Q	129
19PTS04Q	129
19PTS05Q	129
19RAA02AH2	126
19RAA02AH3	126
19RAA02AM2	126
19RAA03AH2	126
19RAA03AH3	126
19RAA03AM2	126
19RAA04AM2	126
19RAA05AM2	126
19RAA06AH2	126
19RAA06AH3	126
19RAA07AH2	126
19RAA07AH3	126
19RAA09AH2	126
19RAA09AH3	126
19RAA11AH2	126
19RAA11AH3	126
19RAA12AH2	126
19RAA12AH3	126
19RAS03AM2	126
19RAS04AH2	126
19RAS05AM2	126
19RAS06AH3	126
19SCA02B	124
19SCA02Q	124
19SCA03B	124
19SCA03Q	124
19SCA04B	124
19SCA04Q	124
19SCA05B	124
19SCA05Q	124
19SCA06B	124
19SCA06Q	124
19SPA02B	124
19SPA02Q	124
19SPA03B	124
19SPA03Q	124
19SPA04B	124
19SPA04Q	124
19SPA05B	124
19SPA05Q	124
19SPA06B	124
19SPA06Q	124

MODEL	PAGE
19TCA02Q	129
19TCA03Q	129
19TCA04Q	129
19TCA05Q	129
19TCA06Q	129
19TCA07Q	129
19TCA09Q	129
19TTA02Q	129
19TTA03Q	129
19TTA04Q	129
19TTA05Q	129
19TTA06Q	129
19TTA07Q	129
19TTA09Q	129
19TTA15Q	129
19TTS02Q	129
19TTS03Q	129
19TTS04Q	129
19TTS05Q	129
20802-MCC	12
20932/932QR -	6
20942/942QR -	6
20952/952QB -	6
20962/962QB -	6
20mm15	155
20PHH753*	131
20PHH75Q	131
20PTHH403*	131
20PTHH40Q	131
212-0	151
212-1	151
212-1/4	151
212-10	151
212-2	151
212-3	151
212-4	151
212-5	151
212-6	151
212-8	151
21mm15	155
21mm15-D	155
22mm15	155
22mm15-D	155
230QB	8
230QBV	8
230QR	8
230QR-GD	8
230QRV	8
23mm15	155
23mm15-D	155
240461PT	45
24mm15	155
24mm15-D	155
24RAA06AL3	126
24RAA07AL3	126
24RAA11AL3	126

MODEL	PAGE
24RAA12AM3	126
24RAA19AM3	126
24RAA23AM3	126
24RAS13AM3	126
250PHF406	131
250PTHFC226	131
265-0	151
265-1	151
265-10	151
265-2	151
265-3	151
265-4	151
265-5	151
265-6	151
265-8	151
265A-0	151
265A-1	151
265A-10	151
265A-2	151
265A-3	151
265A-4	151
265A-5	151
265A-6	151
265A-8	151
273-0	151
273-1	151
273-10	151
273-2	151
273-3	151
273-4	151
273-5	151
273-6	151
273-8	151
273A-1	151
273A-10	151
273A-2	151
273A-3	151
273A-4	151
273A-6	151
273A-8	151
273B-0	151
273B-1	151
273B-10	151
273B-2	151
273B-3	151
273B-4	151
273B-5	151
273B-6	151
273B-8	151
3.5mm11	155
302206PT-Q42	39
302206PT-Q43	39
302206PT-Q52	39
302206PT-Q53	39
302206PT-Q59	39
302206PT-Q62	39

MODEL	PAGE
302206PT-Q63	39
302206PT-Q72	39
302206PT-Q73	39
302206PT-Q92	39
302206PT-Q93	39
31000015PT	82
31000100PT	82
31000200PT	82
31000300PT	82
31000400PT	82
31000500PT	82
31000600PT	82
33500904PT	95
33663D	46
34RAA08AL3	126
34RAA11AL3	126
34RAA15AM3	126
34RAA26AH3	126
34RAA28AH3	126
34RAA33AX3	126
34RAA37AX3	126
34RAA47AX3	126
34RAA68AZ3	126
34RAA68AZ4	126
34RAA75AZ3	126
34RAA75AZ4	126
34RAS11AL3	126
34RAS28AH3	126
34RAS36AX3	126
35PHH653*	131
35PHH65Q	131
35PTHH403*	131
35PTHH40Q	131
35STHFA404	131
35STHFA40Q	131
35STHFC404	131
35STHFC40Q	131
4.5mm11	155
400PHF356	131
400PTHFC206	131
440-12X	150
440-13X	150
440-1X	150
440-22X	150
440-26X	150
440-2I	150
440-2X	150
440-32X	150
440-3BNX	150
440-3I	150
440-3X	150
440-4X	150
440-TX-05X	150
440-TX-06X	150
440-TX-07X	150
440-TX-08X	150

INDEX

MODEL	PAGE
440-TX-09X	150
440-TX-10-W	150
440-TX-10X	150
440-TX-15-125	150
440-TX-15-W	150
440-TX-15X	150
440-TX-20-125	150
440-TX-20-2	150
440-TX-20-W	150
440-TX-20X	150
440-TX-25-W	150
440-TX-25X	150
440-TX-27-W	150
440-TX-27X	150
440-TX-30-W	150
440-TX-30X	150
440-TX-40I	150
440-TX-40-W	150
440-TX-40-W	150
440-TX-40X	150
440-TX-45X*	150
440-TX-50X*	150
445-1-15X	150
445-1X	150
445-2-15X	150
445-2X	150
445-3-15X	150
445-3X	150
445-4-15X	150
445-4X	150
445-5X	150
445-6X	150
45NAB-3P-4	127
45RNAB-2P-4	127
45RNAB-2T-4	127
45RNAB-3P-4	127
45RNAB-3T-4	127
45RNAB-4T-4	127
47BAYPB15P3	133
47BAYPB15P3L	134
47BAYPB21P3	133
47BAYPB21P3L	134
47BAYPB28P3	133
47BAYPB28P3L	134
47BAYPB35P3	133
47BAYPB35P3L	134
47BAYPB48P3	133
47BAYPB48P3L	134
47BAYPB65P4L*	134
47BAYPB70P4	133
47BAYPB90P4	133
47BCYSB30C1	137
47BCYSB30C3	137
47BTYSB20T2	136
47BTYSB30T3	136
47BTYSB40T4	136

MODEL	PAGE
48EAE105AH4	138
48EAE135MH4	138
48EAE15AL3	138
48EAE175AX6	138
48EAE230AX6	138
48EAE28AL3	138
48EAE41AM3	138
48EAE58AM3	138
48EAE58AM4	138
48EAE90AH4	138
48EPE1000D8	139
48EPE125D4	139
48EPE12D2	139
48EPE12Q	139
48EPE150D4	139
48EPE200D6	139
48EPE25D3	139
48EPE36D3	139
48EPE48D3	139
48EPE500D6	139
48EPE65D4	139
48EPE90D4	139
48ESE125D4	140
48ESE12D2	140
48ESE12Q	140
48ESE150D4	140
48ESE25D3	140
48ESE36D3	140
48ESE48D3	140
48ESE65D4	140
48ESE90D4	140
4910X	150
491-AX	150
491-BX	150
491-CX	150
491X	150
492-200MM	150
492-AI	150
492-AX	150
492-BI	150
492-BX	150
492-CI	150
492-CX	150
492I	150
492X	150
493-AX	150
493-BX	150
493-CX	150
493X	150
494X	150
49-TSQ-10M	149
49-TSQ-12M	149
49-TSQ-4M	149
49-TSQ-5M	149
49-TSQ-6M	149
49-TSQ-8M	149

MODEL	PAGE
49-TX-05	151
49-TX-06	151
49-TX-07	151
49-TX-08	151
49-TX-09	151
49-TX-10	151
49-TX-15	151
49-TX-20	151
49-TX-25	151
49-TX-27	151
49-TX-30	151
49-TX-40	151
4mm11	155
5.5mm11	155
55NAL-2T-4	127
55NAL-3P-4	127
55NAL-3T-4	127
55NAL-4P-4	127
55NAL-4T-4	127
55PHH603*	131
55PTHH403*	131
55RNAL-2T-4	127
55RNAL-3P-4	127
55RNAL-3T-4	127
55RNAL-4P-4	127
55RNAL-4T-4	127
55RNAL-6T-4	127
5mm11	155
60QBSF	41
635107PT	19
635108PT	19
6mm11	155
6mm11-D	155
6N-08-10M-3	149
6N-08-10M-4	149
6N-08-10M-6	149
6N-08-12M-3	149
6N-08-12M-4	149
6N-08-12M-6	149
6N-08-8M-3	149
6N-08-8M-4	149
6N-08-8M-6	149
70QBSF	41
75NAL-2V-4	127
75NAL-2X-6	127
75RNAL-2V-4	127
75RNAL-2X-6	127
75RNAL-3V-4	127
75RNAL-3X-6	127
7mm11	155
7mm11-D	155
7PHH602	131
7PHH60Q	131
7PTHH352	131
7PTHH35Q	131
7STHFA55Q	131

MODEL	PAGE
7STHFC55Q	131
80PHH604	131
80PHH60Q	131
80PTHH354	131
80PTHH35Q	131
88RSA-5C-3	124
88RSA-5CQ	124
88RSA-7C-3	124
88RSA-7CQ	124
88RSAL-5C-3	124
88RSAL-5CQ	124
88RSAPT-2CQ	129
88RSAPT-5C-3	129
88RSAPT-5CQ	129
88RSAPT-7CQ	129
88RSATP-2C-3	129
88RSATP-2CQ	129
88RSATP-5C-3	129
88RSATP-5CQ	129
88RSATP-7C-3	129
88RSATP-7CQ	129
88SA-5C-3	124
88SA-5CQ	124
88SA-7CQ	124
8mm11	155
8mm11-D	155
8RSA-10	124
8RSA-10BQ	124
8RSA-5BQ	124
8RSA-7BQ	124
8RSAL-10BQ	124
9mm11	155
9mm11-D	155

Please note that all locations may not service all products.
Contact the nearest Apex Tool Group Sales & Service Center for the appropriate facility to handle your service requirements.

Sales Center
Service Center

NORTH AMERICA | SOUTH AMERICA

Detroit, Michigan
Apex Tool Group
2630 Superior Court
Auburn Hills, MI 48236
Phone: +1 (248) 393-5640
Fax: +1 (248) 391-6295

Lexington, South Carolina
Apex Tool Group
670 Industrial Drive
Lexington, SC 29072
Phone: +1 (800) 845-5629
Phone: +1 (919) 387-0099
Fax: +1 (803) 358-7681

Louisville, Kentucky
Apex Tool Group
1000 Glengarry Drive
Suite 150
Fairdale, KY 40118
Phone: +1 (502) 708-3400
apexpowertools.com/service

Canada
Apex Tool Canada, Ltd.
7631 Bath Road
Mississauga, Ontario L4T 3T1
Canada
Phone: (866) 691-6212
Fax: (905) 673-4400

Mexico
Apex Tool Group
Manufacturing México
S. de R.L. de C.V.
Vialidad El Pueblito #103
Parque Industrial Querétaro
Querétaro, QRO 76220
Mexico
Phone: +52 (442) 211 3800
Fax: +52 (800) 685 5560

Brazil
Apex Tool Group
Ind. Com. Ferram, Ltda.
Av. Liberdade, 4055
Zona Industrial Iporanga
Sorocaba, São Paulo
CEP# 18087-170
Brazil
Phone: +55 15 3238 3820
Fax: +55 15 3238 3938

EUROPE | MIDDLE EAST | AFRICA

England
Apex Tool Group GmbH
C/O Spline Gauges
Piccadilly, Tamworth
Staffordshire B78 2ER
United Kingdom
Phone: +44 1827 8727 71
Fax: +44 1827 8741 28

France
Apex Tool Group S.A.S.
25 rue Maurice Chevalier
B.P. 28
77831 Ozoir-La-Ferrière
Cedex, France
Phone: +33 1 64 43 22 00
Fax: +33 1 64 43 17 17

Germany
Apex Tool Group GmbH
Industriestraße 1
73463 Westhausen
Germany
Phone: +49 (0) 73 63 81 0
Fax: +49 (0) 73 63 81 222

Hungary
Apex Tool Group
Hungária Kft.
Platánfa u.2
9027 Györ
Hungary
Phone: +36 96 66 1383
Fax: +36 96 66 1135

TOOLimpex CZECH REPUBLIC s.r.o.

Hrabinská 498/19, 737 01 Český Těšín, Česka republika
Mobil: +420 731 018 782

APEX TOOL GROUP

Apex Tool Group, LLC
Phone: +1 (800) 845-5629
Phone: +1 (919) 387-0099
Fax: +1 (803) 358-7681
www.apexpowertools.com